GDS Corp

Gas and Flame Detection

Operation and Maintenance Manual

PROTECTOR PXA Four/Eight-Channel Controller

Revision 1.0

GDS Corp.

1245 Butler Road • League City, TX 77573

409-927-2980 • www.gdscorp.com

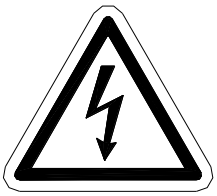

CAUTION: FOR SAFETY REASONS THIS EQUIPMENT MUST BE OPERATED AND SERVICED BY QUALIFIED PERSONNEL ONLY. READ AND UNDERSTAND INSTRUCTION MANUAL COMPLETELY BEFORE OPERATING OR SERVICING.

ATTENTION: POUR DES RAISONS DE SÉCURITÉ, CET ÉQUIPEMENT DOIT ÊTRE UTILISÉ, ENTRETENU ET RÉPARÉ UNIQUEMENT PAR UN PERSONNEL QUALIFIÉ. ÉTUDIER LE MANUE D'INSTRUCTIONS EN ENTIER AVANT D'UTILISER, D'ENTRETENIR OU DE RÉPARER L'ÉQUIPEMENT.

REVISION HISTORY

Revision 1.0 2/25/24 Initial Release

Copyright © 2025 GDS Corp. All Rights Reserved

P/N 1200-1199

CONTENTS

1 SAFETY INFORMATION _____ 6

2 OVERVIEW _____ 7

3 INSTALLATION _____ 9

4 PROGRAMMING & SETUP _____ 16

5 MODBUS REGISTER MAP _____ 28

6 TROUBLESHOOTING GUIDE _____ 30

7 SPECIFICATIONS _____ 31

8 DIMENSIONS _____ 32

TABLE OF FIGURES

FIGURE 2-1: PXA COMPONENT LAYOUT 7

FIGURE 3-1: AC INPUT POWER SUPPLY CONNECTIONS 9

FIGURE 3-2: DC INPUT POWER SUPPLY CONNECTIONS 10

FIGURE 3-3: PXA CONTROLLER MAIN BOARD SIGNAL & RELAY CONNECTIONS 11

FIGURE 3-4: PXA ANALOG INPUT WIRING FOR 3-WIRE POWERED SENSOR 12

FIGURE 3-5: PXA ANALOG INPUT WIRING FOR 2-WIRE LOOP-POWERED SENSOR 12

FIGURE 3-6: OPTIONAL ANALOG OUTPUT BOARD 13

FIGURE 3-7: ALARM RELAY 1-4 WIRING 14

FIGURE 3-8: MODBUS RS-485 SERIAL INTERFACE WIRING 15

FIGURE 3-9: REMOTE ALARM ACK INTERFACE 15

FIGURE 4-1: HOME DISPLAY SCREEN 16

FIGURE 4-2: BAR GRAPH DISPLAY SCREEN 17

FIGURE 4-3: TREND DISPLAY SCREEN 18

FIGURE 4-4: CHANNEL SETUP MENU 19

FIGURE 4-5: SETUP MENU SCREEN 21

FIGURE 4-6: RELAY SETUP SCREEN 22

FIGURE 4-7: MODBUS SERIAL PORT MENU 23

FIGURE 4-8: ANALOG OUTPUTS SCREEN 24

FIGURE 4-9: DATA LOGGING FILE NAMES 25

FIGURE 4-10: DATA LOGGING FILE CONTENTS 25

FIGURE 4-11: ANALOG OUTPUTS SCREEN 26

FIGURE 4-12: RELAYS SCREEN 27

FIGURE 8-1: OUTSIDE DIMENSIONS 32

FIGURE 8-2: MOUNTING HOLE DIMENSIONS 33

1 SAFETY INFORMATION

Important – Read Before Installation

Users should have a detailed understanding of *PROTECTOR PXA* Controller operating and maintenance instructions. Use the *PROTECTOR PXA* Controller only as specified in this manual or detection of gases and the resulting protection provided may be impaired. Read the following WARNINGS prior to use.

WARNINGS

- The *PROTECTOR PXA* Controller must be installed, operated, and maintained in accordance with information contained herein. Installation in any hazardous area must comply with all applicable restrictions, requirements, and guidelines for said hazardous areas. It is the end user customer's final decision to ensure that the *PROTECTOR PXA* Controller is suitable for the intended use.
- Do not paint controller assembly.
- Do not operate the *PROTECTOR PXA* Controller if its enclosure is damaged or cracked or has missing components. Make sure the cover, internal PCB's and field wiring are securely in place before applying power.
- Do not expose the *PROTECTOR PXA* Controller to electrical shock or continuous severe mechanical shock. Protect *PROTECTOR PXA* Controller from dripping liquids and high-power sprays.
- Periodically evaluate controller and gas detectors for correct end-to-end operation of the system's alarm events.

WARRANTY

GDS Corp. products carry a 1-year limited repair or replacement warranty on electronics and workmanship and one year warranty on sensors. GDS Corp. reserves the right to void warranty claims based on evidence of misuse, abuse, or misapplication. The warranty period starts on the date of shipment.

IF YOU HAVE QUESTIONS

GDS Corp
1245 Butler Road, League City, Texas 77573
409-927-2980 (Office)
info@gdscorp.com
www.gdscorp.com

2 OVERVIEW

The GDS Corp *PROTECTOR PXA* Controller is designed to provide power for and monitor gas values from one to eight wired gas monitors via industry-standard 4-20mA analog inputs.

The *PROTECTOR PXA* features a 4.3" diagonal high-contrast, sunlight-readable color touch-screen LCD display that provides immediate feedback on alarm status and input values.

The *PROTECTOR PXA* includes four programmable SPDT dry-contract alarm relays that support channel grouping, alarm source selection, voting and normal or FAILSAFE operation. When latched, the RESET / ESC button can be used to clear the latched alarm.

The PROTECTOR PXA controller also includes an RS-485 serial MODBUS slave interface that allows remote MODBUS serial master devices to monitor the input channels and alarm status in real time.

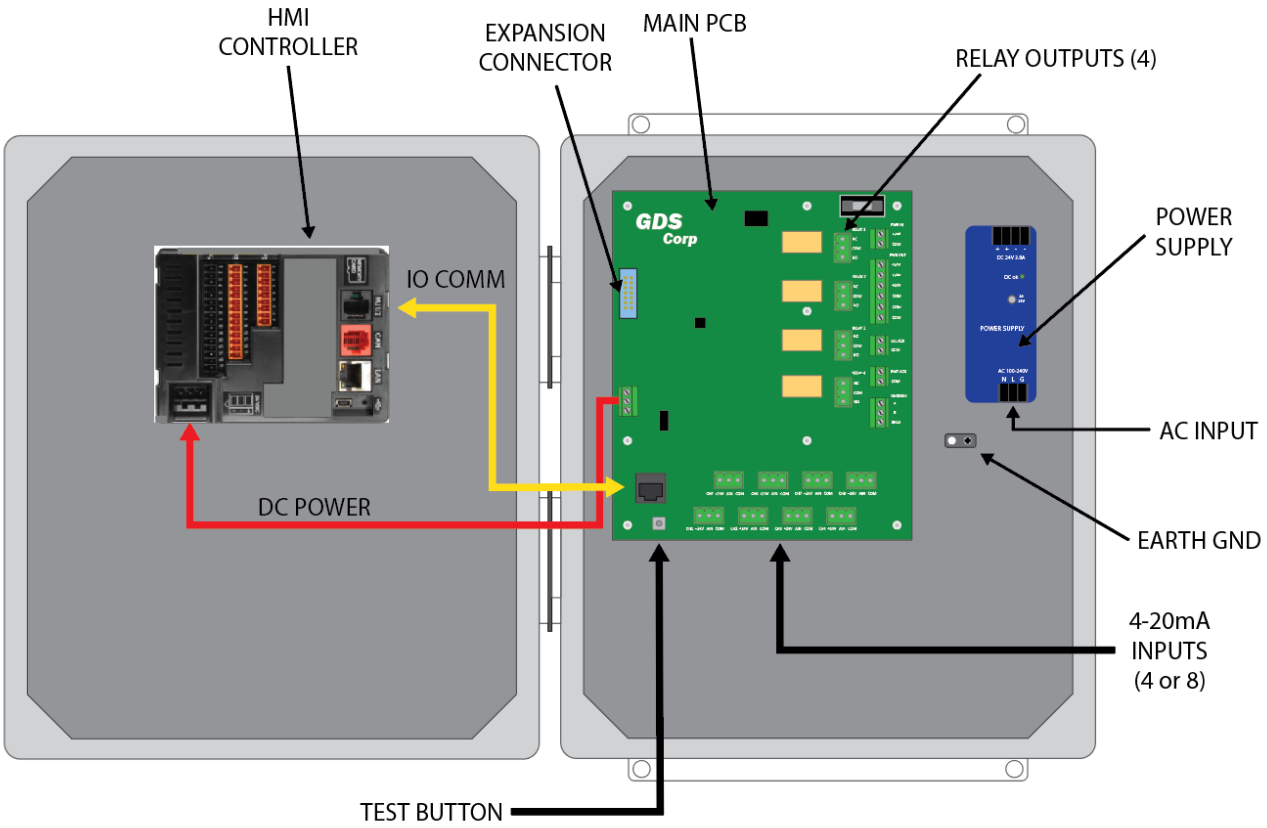

Figure 2-1: PXA Component Layout

Key features include:

- Easy to use, intuitive touch-screen user interface.
- Standard four/eight analog inputs with surge / overvoltage protection and convenient ground and DC excitation terminals.
- Optional 8 analog outputs.
- Color coded, graphical display of input value and alarm status.
- Standard 90-watt power supply; 75 watts available to power remote sensors.
- Four (4) SPDT dry-contact alarm relays
- Alarm relay configuration supports voting, channel grouping and normal or FAILSAFE operation.
- RS-485 MODBUS serial port allows remote DCS / PLC to query alarm, status and gas value data using MODBUS RTU protocol
- Data logging capability to removable SD-Card

3 INSTALLATION

POWER INPUT CONNECTION

When using the standard AC power supply, the *PROTECTOR PXA* Controller is designed to operate on a clean source of 110VAC / 60 HZ or 220VAC / 50 Hz power. Up to 75 watts of power is available at the PWR OUT outputs.

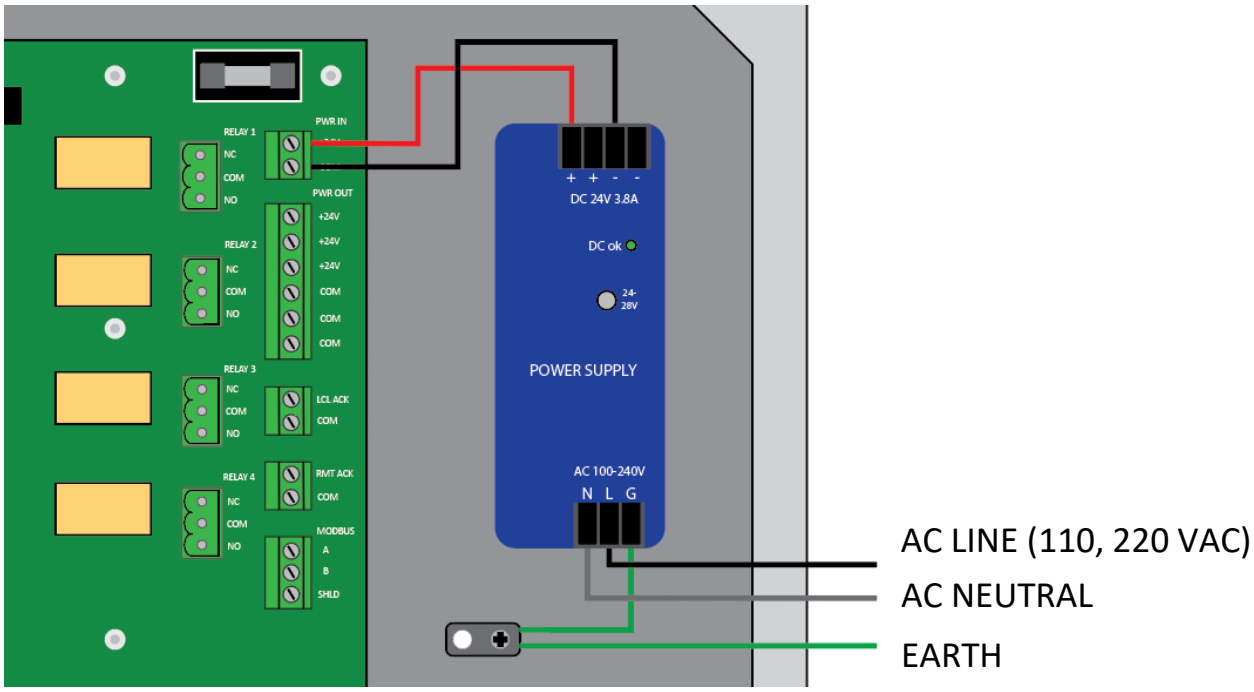

Figure 3-1: AC Input Power Supply Connections

The AC input is located on the lower front of the power supply (see figure above). **The AC ground conductor must be connected to the GROUND LUG provided on the back panel**. The power supply accepts either 110 or 220VAC and does not require settings changes.

The Protector PXA Controller can also be powered directly from a source of DC voltage **between +22VDC and +26VDC.** GDS Corp always recommends that DC power be provided by an Uninterruptable Power Supply (UPS) to ensure a clean and reliable power source. Even short interruptions can result in system startup delay and the need for gas sensors to reestablish their equilibrium and come back on-line.

NOTE: TO ENSURE USER SAFETY, ALWAYS PROVIDE A SOLID EARTH GROUND CONNECTION AS SHOWN BELOW.

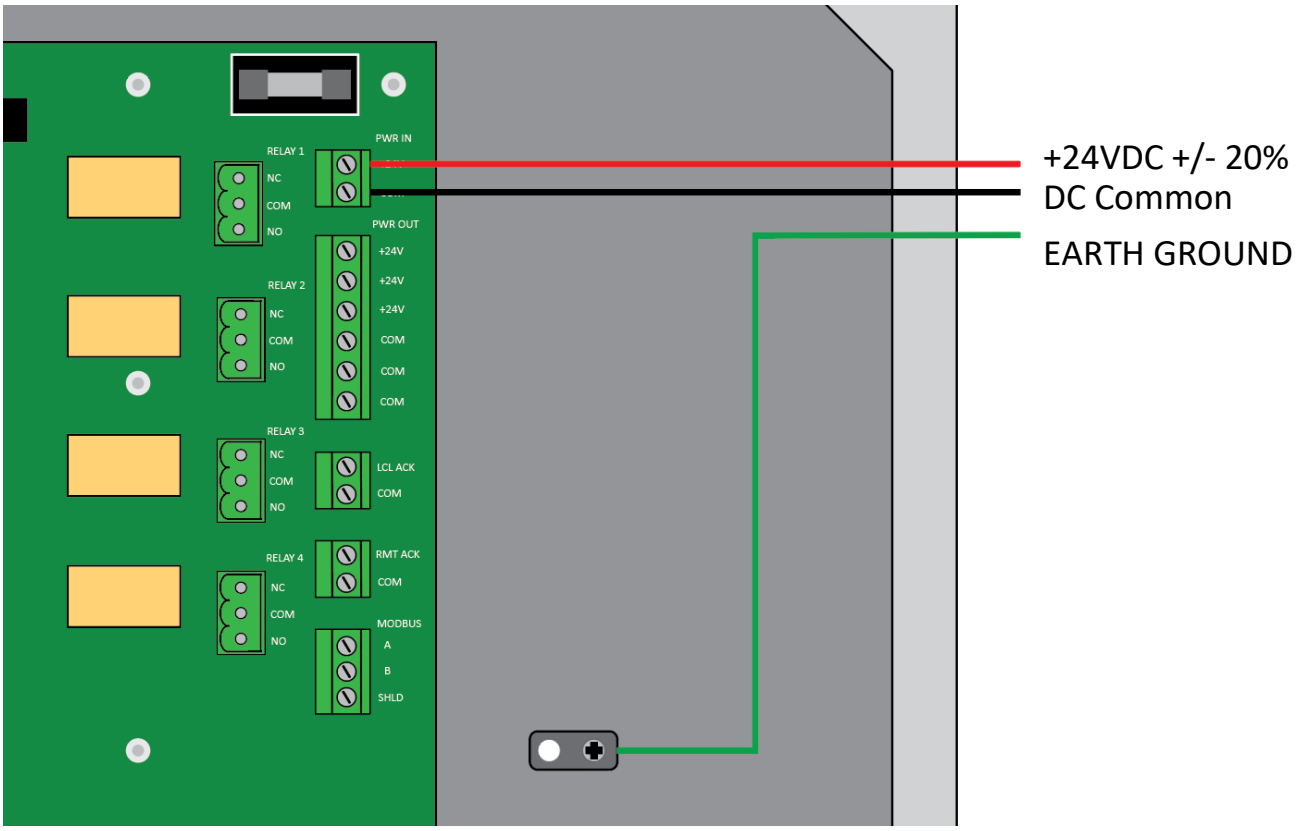

Figure 3-2: DC Input Power Supply Connections

SIGNAL & RELAY CONNECTIONS

The PXA Controller Main Board hosts all the signal & relay inputs and outputs.

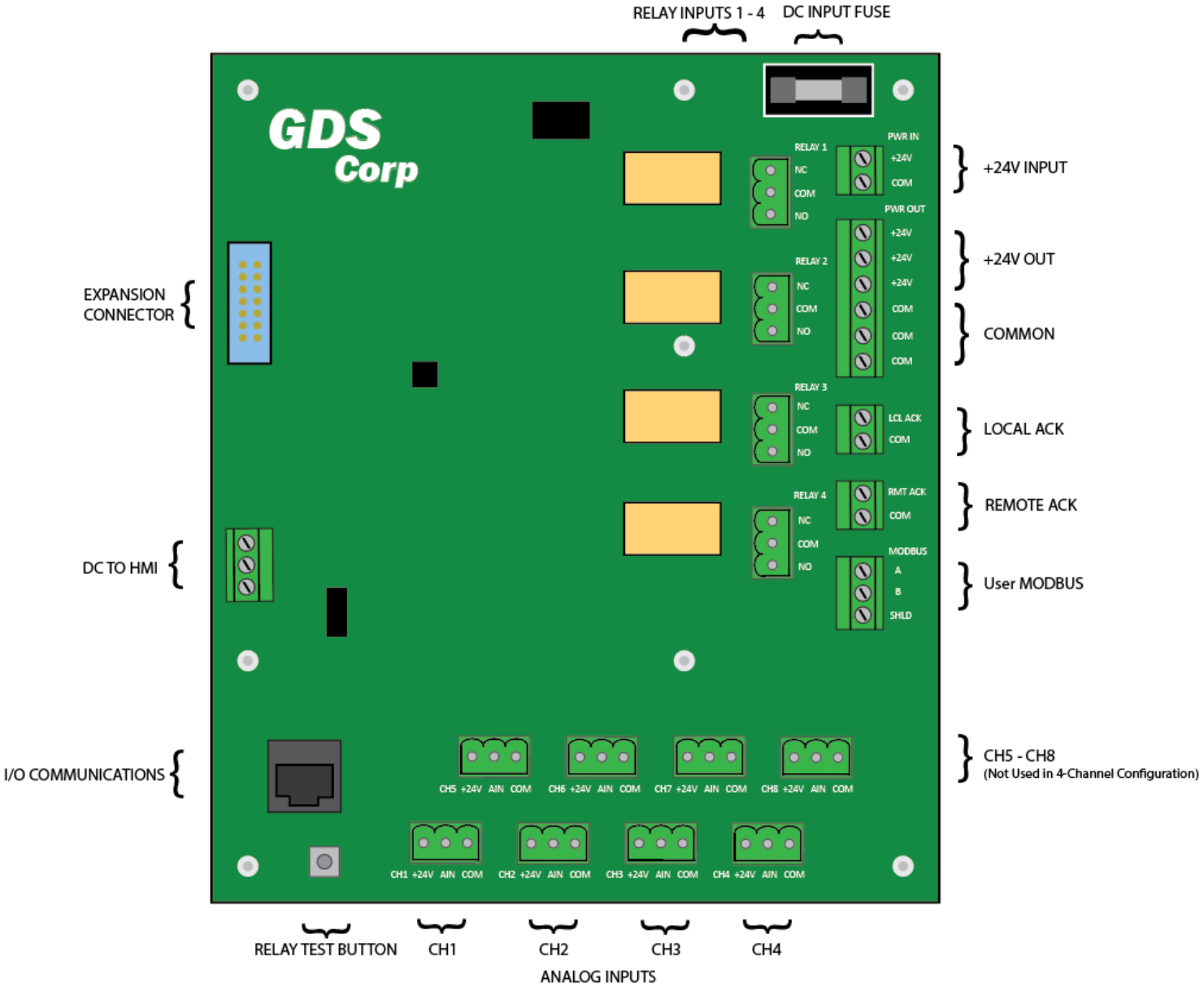

Figure 3-3: PXA Controller Main Board Signal & Relay Connections

ANALOG INPUT CONNECTIONS

The four/eight analog input terminals are found along the bottom of the PXA Main Board. Each provides convenient ground and +24V excitation voltage for remote sensors. Each input covers the full range of 0-20mA, allowing the PXA controller to recognize problems with remote sensors that use negative fault values to show trouble. A total of 75 watts of DC power is available for remote sensors.

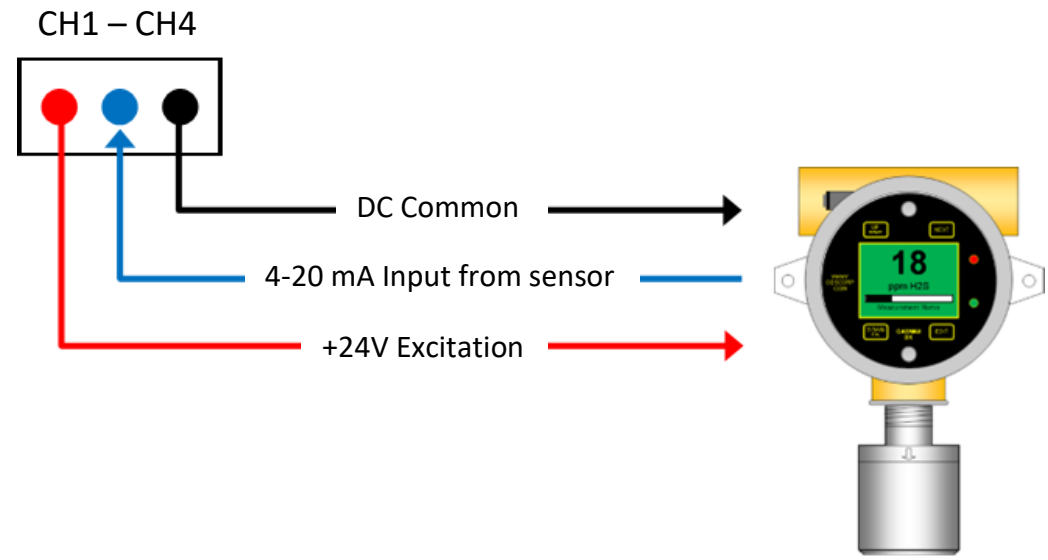

Figure 3-4: PXA Analog Input Wiring for 3-Wire Powered Sensor

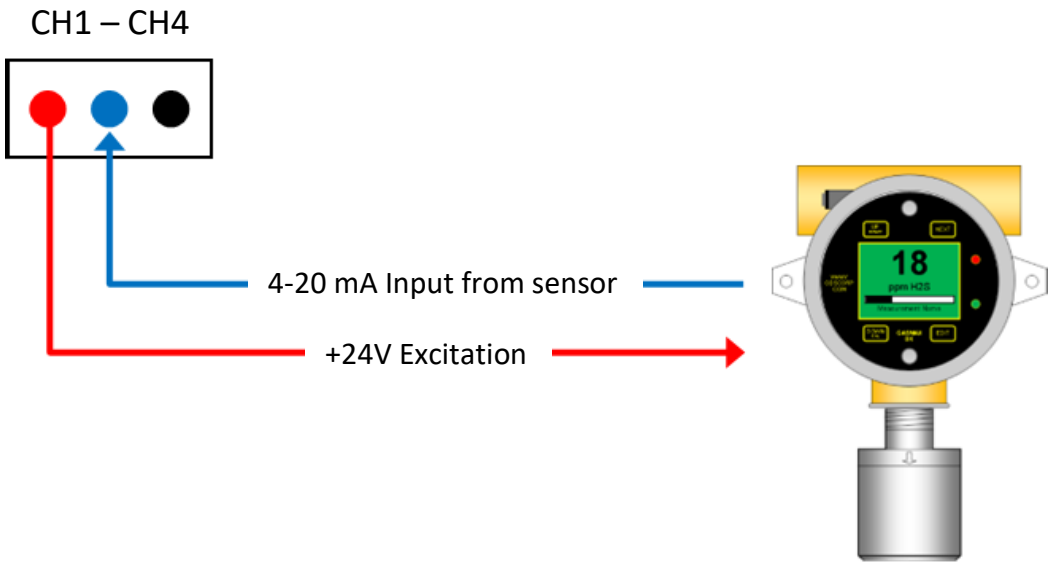

Figure 3-5: PXA Analog Input Wiring for 2-Wire Loop-Powered Sensor

OPTIONAL ANALOG OUTPUTS

If desired, the PXA Controller can be configured with a 4/8 channel non-isolated analog output board. Each analog output tracks the incoming analog signal on the corresponding input channel across the full 0-20mA range.

Note: For four-channel controllers, only Channel 1 through 4 are active.

NOTE: PRESSING THE OVERRIDE BUTTON CAN TRANSMIT ALARM SIGNALS TO MONITORING DEVICES! USE CAUTION WHEN ACTIVATING THE OVERRIDE FUNCTION.

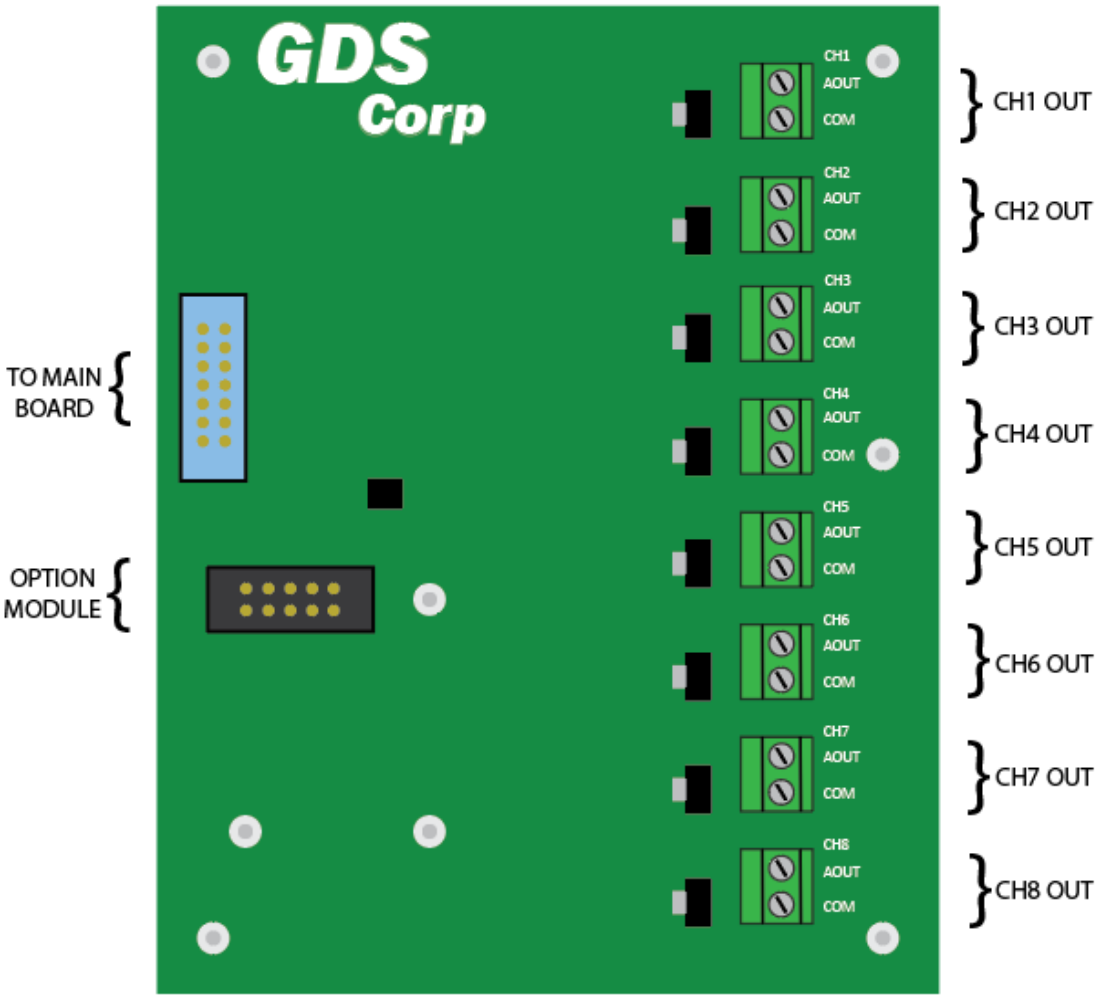

Figure 3-6: Optional Analog Output Board

RELAY OUTPUT CONNECTIONS 1-4

The *PROTECTOR PXA* has four dry-contact five-amp (5A) alarm relays that are wired to provide NORMALLY OPEN and NORMALLY CLOSED contacts. When not energized, the COMMON terminal is connected to the NORMALLY CLOSED contact. When the relay is energized, the COMMON terminal is connected to the NORMALLY OPEN terminal.

All relays can be used in both NORMAL and FAILSAFE mode. In NORMAL mode, the relay is in the non-energized state until an alarm occurs and then is energized while the alarm is present. In the FAILSAFE mode, the relay is energized when no alarm is present and becomes de-energized while an alarm is occurring. FAILSAFE mode allows the remote monitoring device to detect power failures or wiring failures in addition to gas alarms.

All relays are isolated from the DC supply and are isolated from each other.

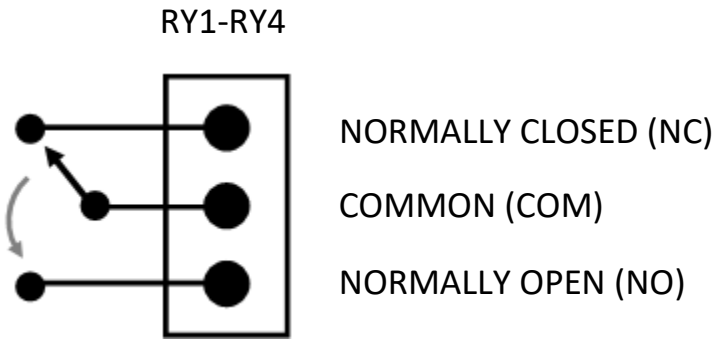

Figure 3-7: Alarm Relay 1-4 Wiring

NOTE: RELAYS ARE RATED FOR 5 Amp NON-INDUCTIVE LOADS ONLY. WHEN OPERATING DC INDUCTIVE LOADS SUCH AS RELAYS OR DIRECT CURRENT MOTORS, ALWAYS CONNECT AN APPROPRIATELY SIZED REVERSE VOLTAGE PROTECTION "SNUBBER' DIODE ACROSS THE TERMINALS OF THE LOAD TO PROTECT THE RELAY FROM TRANSIENT VOLTAGE SPIKES THAT OCCUR WHEN THE RELAY OPENS UNDER LOAD.

RS-485 SERIAL MODBUS

The *PROTECTOR PXA* controller includes a single non-isolated RS-485 serial MODBUS slave port. This port allows a remote MODBUS master to query the *PROTECTOR PXA* to retrieve gas levels, alarm conditions and other data. See chapter on MODBUS REGISTER MAP for more detail on data available over MODBUS.

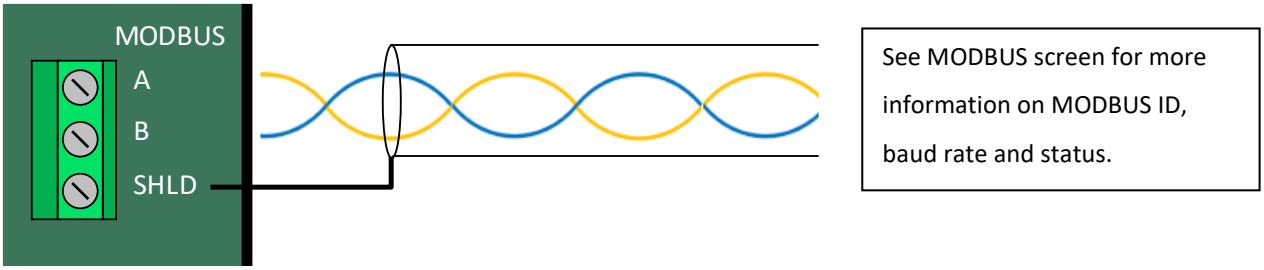

Figure 3-8: MODBUS RS-485 Serial Interface Wiring

LOCAL & REMOTE ACKNOWLEDGE

The *PROTECTOR PXA* controller supports a local Alarm Acknowledge pushbutton that is installed within the enclosure.

The *PROTECTOR PXA* also supports a remote Alarm Acknowledge pushbutton that can be installed up to 100 ft from the enclosure. The button should be MOMENTARY, NORMALLY OPEN (see diagram). In electrically noisy environments, GDS Corp recommends running shielded wiring in metallic conduit for maximum reliability.

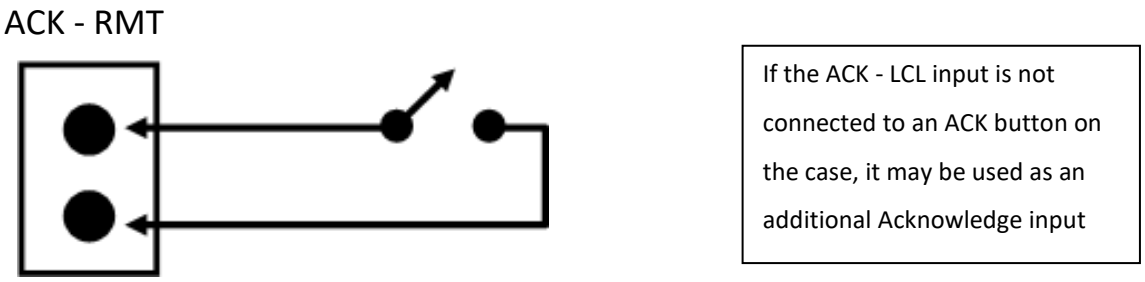

Figure 3-9: Remote Alarm ACK Interface

4 PROGRAMMING & SETUP

PROTECTOR PXA CONTROLLER PROGRAMMING

After installation, unless the *PROTECTOR PXA* Controller has been pre-programmed for the specific application, each channel must be individually programmed to support the connected sensors. Programmable settings include channel enable / disable, full scale range, engineering units, filtering, alarm levels and more.

Channels are programmed using the CHANNEL CONFIGURATION MENU, while global settings for the entire controller are programmed using the SYSTEM SETUP MENU detailed later in this chapter.

After power-up, the *PROTECTOR PXA* will display a start-up screen and then switch to the Home Display.

HOME DISPLAY

After power-up, the HOME DISPLAY screen is activated. Once the mandatory warmup interval is complete, for each channel, the screen shows the channel name, live reading, engineering units and corresponding alarm condition where GREEN = Normal, YELLOW = Alarm 1, RED = Alarm 2, PURPLE = Alarm 3 and GRAY = FAULT or OFF.

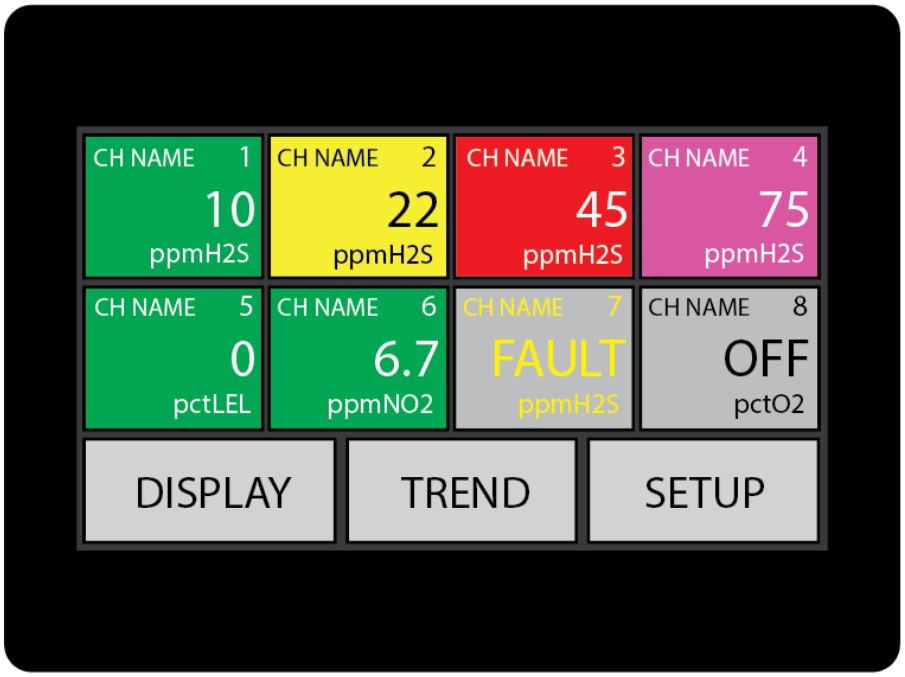

Figure 4-1: Home Display Screen

At the bottom of the HOME DISPLAY are the **DISPLAY** button, **TREND** button, and the **SETUP** button. If any channel has exceeded one of its alarm conditions, the displayed value will flash until the ACK button is pressed to acknowledge the alarm.

Pressing the center of each channel display will move the screen to the associated CHANNEL SETUP screen.

The **DISPLAY** button will change the display mode to show all channel levels in a bar graph graphic. The **TREND** button will change the display mode to show a trend graph of the last 30 minutes for each channel. Pressing the **SETUP** button will provide access to relay settings, analog and Modbus output settings, system settings and a DIAGNOSTICS screen that provides convenient ways to evaluate communications with monitoring devices.

BARGRAPH DISPLAY SCREEN

The BARGRAPH screen displays readings from all four/eight channels in a horizontal bar graph design that might be more useful in certain situations. Each bar represents the status of its corresponding input in a zero to full scale left-to-right format, with the color of the bar representing the alarm condition.

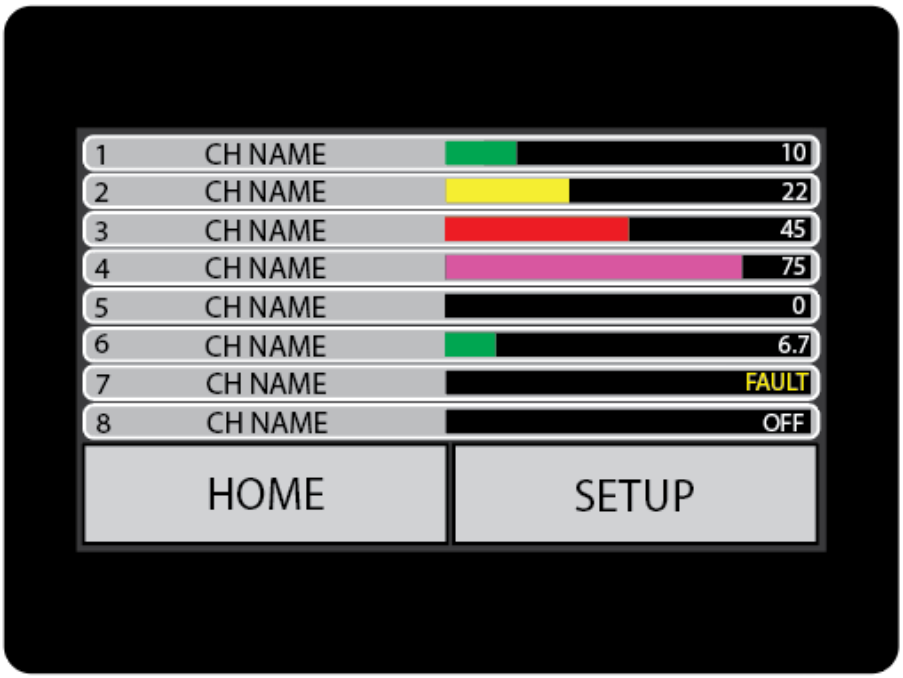

Figure 4-2: Bar Graph Display Screen

If any channel has exceeded one of its alarm conditions, the displayed value will flash until the ACK button is pressed to acknowledge the alarm.

Pressing the **SETUP** button will display the SETUP screen.

Pressing the **NEXT** button moves the screen to the TREND display screens.

TREND DISPLAY SCREEN

The four/eight TREND screens show the most recent 30 minutes of sensor trend data. The screen also shows the programmed Alarm 1 and Alarm 2 values with yellow and red dashed lines.

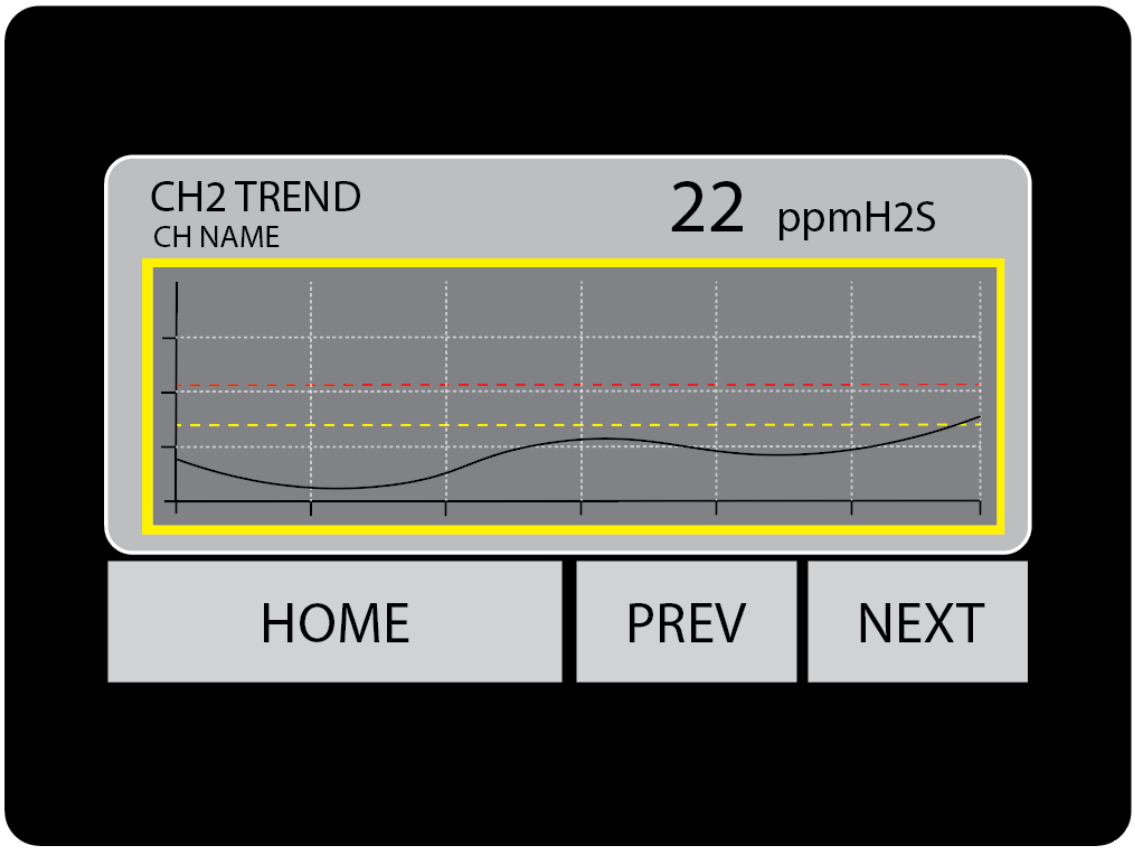

Figure 4-3: Trend Display Screen

If any channel has exceeded one of its alarm conditions, the displayed value will flash until the ACK button is pressed to acknowledge the alarm.

Pressing the **SETUP** button will display the SETUP screen.

Pressing the **NEXT** button moves the screen to the next of the four TREND display screens. If viewing the Channel 4 Trend screen, the display will return to the primary display.

Pressing the **PREV** button moves the screen to the previous TREND display screen.

CHANNEL SETUP MENU

After installation, each channel in the *PROTECTOR PXA* controller must be programmed to support connected sensors and other devices using the CHANNEL SETUP menu. To access the CHANNEL SETUP menu, press the center of any of the channel screens shown on the PRIMARY DISPLAY.

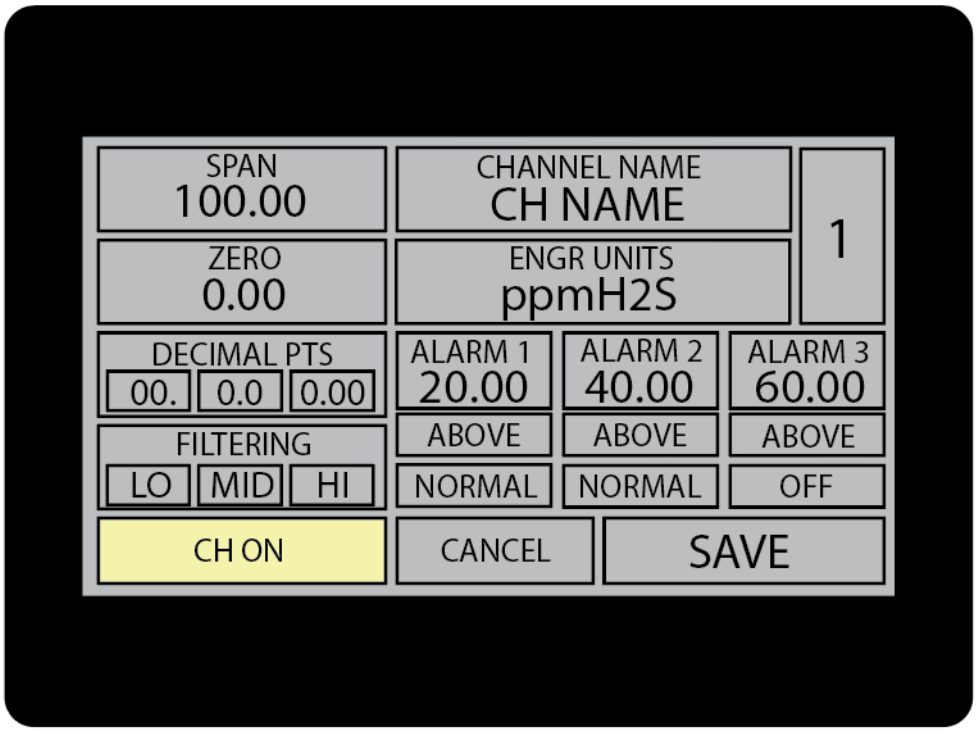

Figure 4-4: Channel Setup Menu

The CHANNEL SETUP menu allows for easy configuration of each of the input channels. The channel being edited is shown in the upper right-hand corner.

CHANNEL SETUP MENU		
Name	***Description***	***Default***
Span	Channel full scale value	"100"
Zero	Channel zero value	"0"
Decimal Points	"00." No decimal points (Ranges 0-100 and above) "0.0" One decimal point (Ranges 0-10.0 to 0-99.0) ".00" Two decimal points (Ranges 0-1.00 to 0-9.00)	"00."
FILTERING	LO: No filtering MD: Medium filtering HI: Maximum filtering (60 second	LO
Channel Name	Alphanumeric value assigned by user	"CH NAME"
Engineering Units	Alphanumeric value assigned by user	"ppmH2S"
Alarm 1 Value	Alarm 1 User Programmable Value	"20"

Alarm 1 BELOW	BELOW: Alarm if input is BELOW the target value ABOVE: Alarm if input is ABOVE the target value	"ABOVE"
Alarm 2 Value	Alarm 2 User Programmable Value	"40"
Alarm 2 BELOW	BELOW: Alarm if input is BELOW the target value ABOVE: Alarm if input is ABOVE the target value	"ABOVE"
Alarm 2 NORM	NORM: Alarm 2 becomes inactive if alarm condition is no longer present LATCH: Once triggered, Alarm 2 relay remains active until ACK pressed	"NORM"
Alarm 3 Value	Alarm 3 User Programmable Value	"60"
Alarm 3 BELOW	BELOW: Alarm if input is BELOW the target value ABOVE: Alarm if input is ABOVE the target value	"ABOVE"
Alarm 3 OFF	OFF: Alarm 3 not active and alarm value ignored ON: Alarm 3 active	"OFF"
CH ON / OFF	ON: Channel is being monitored for alarm conditions OFF: Channel is inactive	"ON"
CANCEL	Cancels any changes and returns to Channel Detail View	N/A
SAVE	Saves current settings to active channel and returns to Channel Detail View	N/A

SYSTEM SETUP MENU SCREEN

The SYSTEM SETUP MENU screen allows the user to select the various system setting menus.

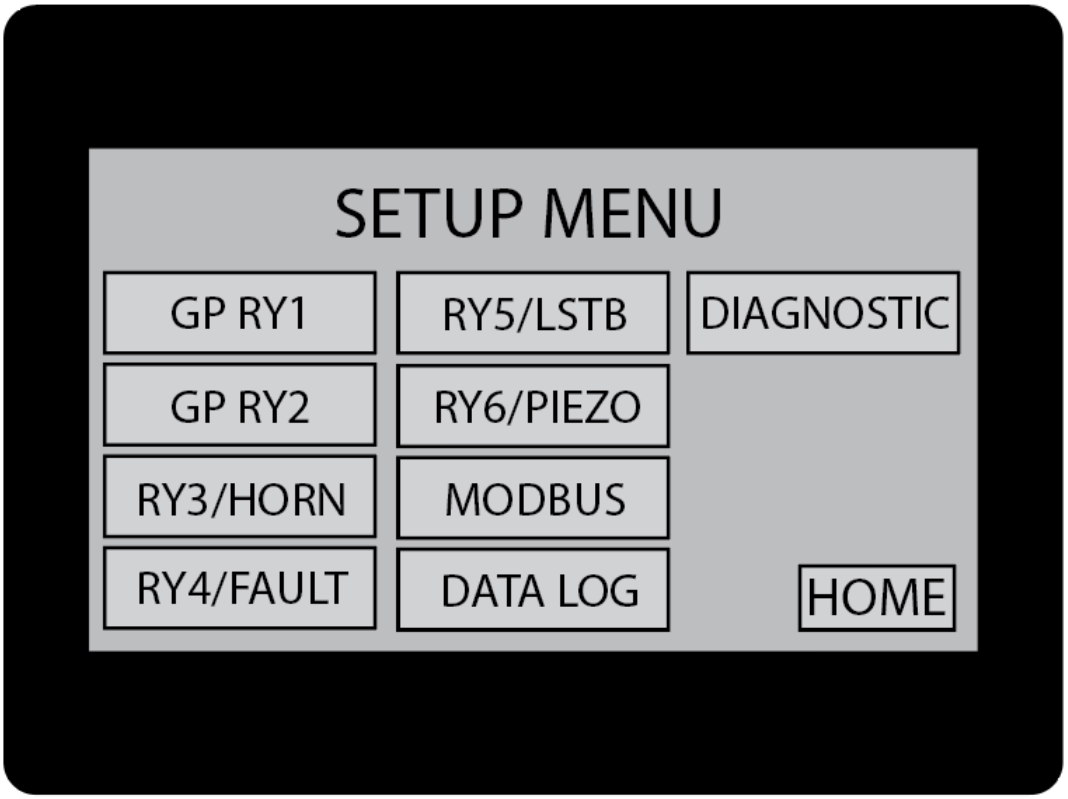

Figure 4-5: Setup Menu Screen

SYSTEM SETUP MENU		
GP RY1	View the General-Purpose Relay 1 setup screen	
GP RY2	View the General-Purpose Relay 2 setup screen	
RY3 / HORN	View the Relay 3 setup screen. Relay 3 can be configured as either a general-purpose relay or as a dedicated HORN relay	
RY4 / FAULT	View the Relay 4 setup screen. Relay 4 can be configured as either a general-purpose relay or as a dedicated FAULT relay	
RY5 / LSTB	View the Relay 5 setup screen. Relay 5 is a wet-contact output generally connected to a local +24V strobe	
RY6 / PIEZO	View the Relay 6 setup screen. Relay 6 is a wet-contact output generally connected to a local 24V piezo sounder	
DIAGNOSTIC	View the Diagnostic screen. The Diagnostic screen allows the user to activate any of the relay outputs or analog outputs for testing. The Diagnostic screen also includes the "RESET DEFAULTS" system reset and a raw values screen.	
HOME	Return to Primary Display	

RELAY SETUP SCREENS 1-6

The RELAY SETUP screen(s) allows the user to program the four dedicated alarm relays.

Figure 4-6: Relay Setup Screen

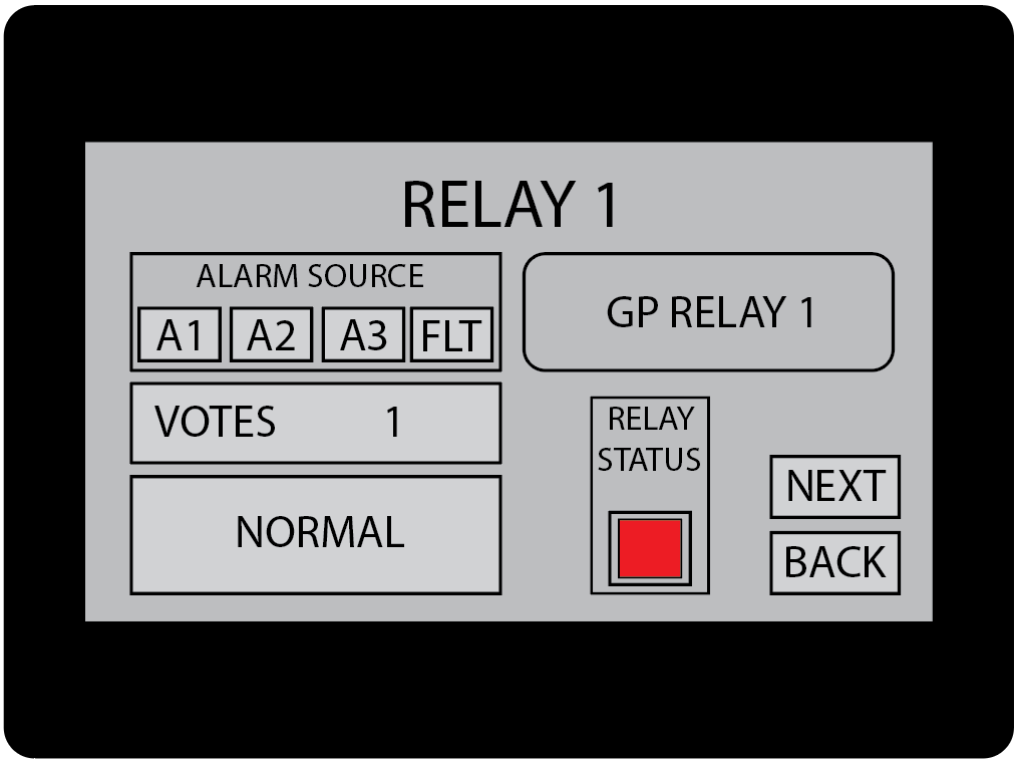

RELAY SETUP MENU		
Name	*Description*	*Default*
ALARM SOURCES	A1: Relay triggers if Alarm 1 is active for any channel A2: Relay triggers if Alarm 2 is active for any channel A3: Relay triggers if Alarm 3 is enabled and active for any channel FLT: Relay triggers if any FAULT is present Note: Only ONE choice is possible	R1, R5 = A1 R2, R6 = A2 R3 = A3 R4 = FLT
VOTES	Number of votes (active channels) that must be active before the relay will become active. For example, if VOTES = 3, at least three channels must be in alarm before the relay will become active.	R1-R6 = 1
LOGIC	NORMAL: Relay is OFF (not energized) with no alarm FAILSAFE: Relay is ON (energized) with no alarm	"NORMAL"
HORN	Relay 3 and Relay 6 can be programmed for the HORN function. If set for HORN, then if any channel's Alarm 2 is activated, the relay will also activate and remain active until either 1) the alarm condition is removed or 2) the user presses the Alarm ACK button.	"HORN"

MODBUS SERIAL PORT MENU

The PROTECTOR PXA CONTROLLER features an RS-485 serial communication port that is configured as a MODBUS serial slave. External MODBUS master devices can access the controller's data and status by reading predefined registers from the PXA controller. See Chapter 5 for a list of MODBUS registers and data formats.

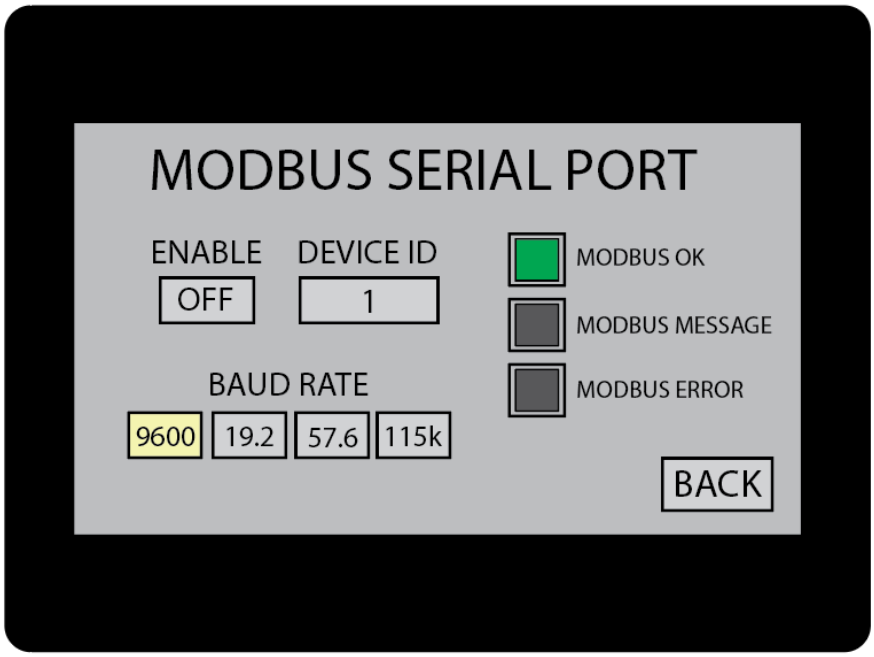

Figure 4-7: MODBUS Serial Port Menu

COMMUNICATIONS MENU		
Name	*Description*	*Default*
ENABLED	The MODBUS port can be ENABLED or DISABLED. IF DISABLED, the PXA will not reply to any MODBUS command received on the slave port interface.	"DISABLED"
MODBUS ID	The MODBUS DEVICE ID is the MODBUS address of the PXA when polled from a remote MODBUS master device. Allowable values are 1 to 240. The use of address "1" is not recommended if any other MODBUS devices are connected in the serial data string.	"1"
BAUD RATE	Allowable serial data rates. Values are 9600 baud, 19.2k baud, 57.6k baud, and 115.2k baud. Other serial port settings are no parity, 8 data bits, one stop bits and cannot be changed.	"9600"
INDICATORS	OK: A steady green indicates that the MODBUS slave port is open and ready to receive commands. MSG: A green flash indicates that a properly formatted MODBUS command has been received, and a reply is being sent. ERR: A red flash indicated that an error has occurred; an incorrect address, an incorrect number of bytes requested, or data garbled on reception.	N/A

DATA LOGGING MENU

The PROTECTOR PXA controller includes the ability to continuously record data from the four/eight input channels. This information is stored on a microSD data card plugged into the side of the controller.

To enable data logging, make sure there is an SD-card installed in the card slot and set the ENABLE button to ON. If necessary, adjust the controller's Real Time Clock (RC) by setting the correct time and date into the RTC buttons and press "SET TIME".

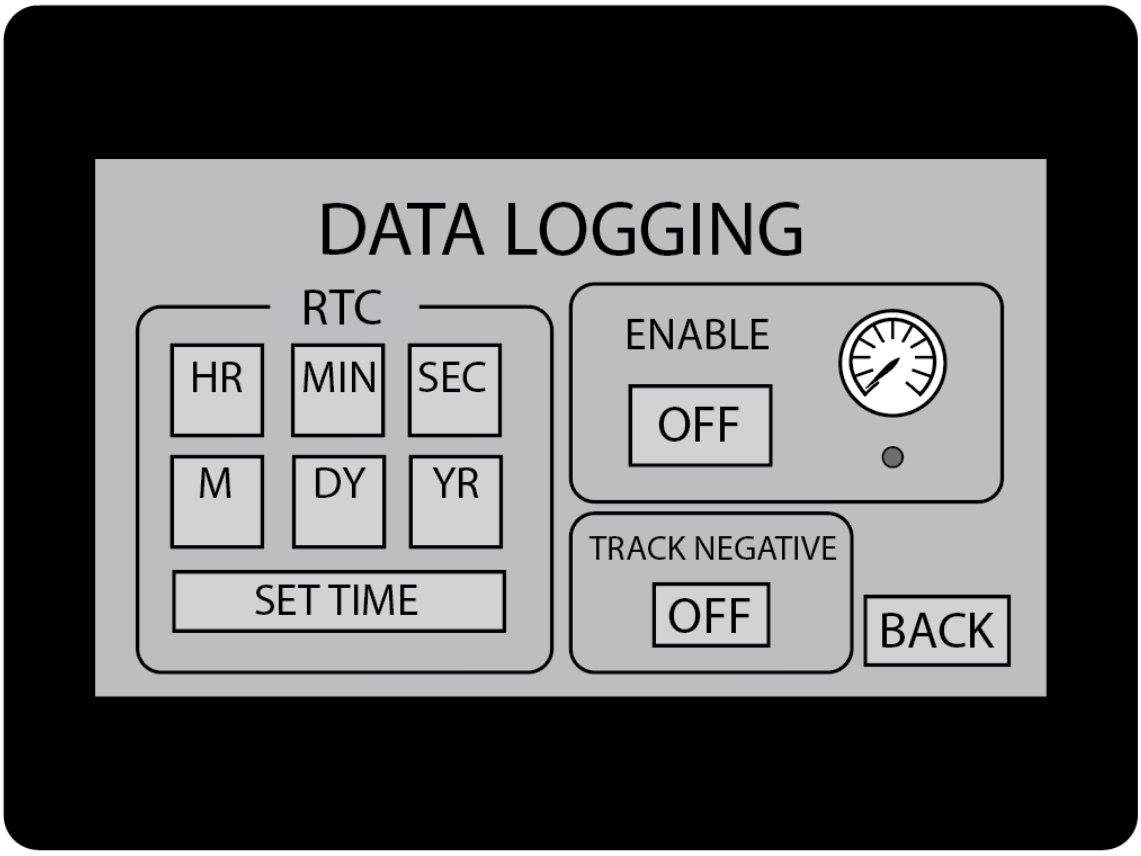

Figure 4-8: ANALOG OUTPUTS Screen

To retrieve the stored data. Set Data Logging to "OFF", remove the SD Card and connect it to a PC or Apple computer using a standard SD and card adapter. Copy the files from the SD Card to a directory on the computer. The contents will appear as a series of comma-separated variable (CSV) spreadsheet-compatible files. The file name includes the month, date, and hour, and data is stored in each file at one-minute intervals.

Example "052315.CSV" refers to the file created on the fifth month, 23rd day and 15th hour.

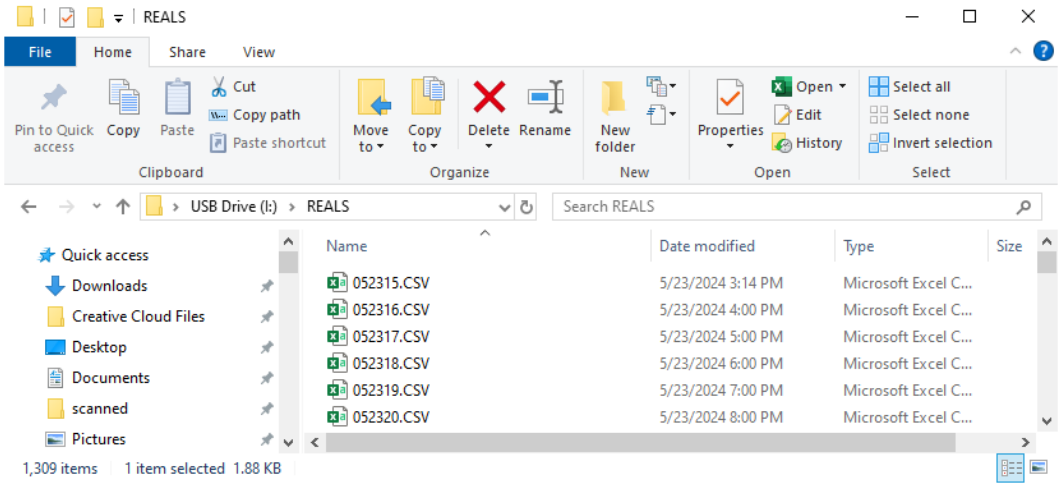

Figure 4-9: Data Logging File Names

Each CSV file will contain one hour of data, collected once per minute, as shown:

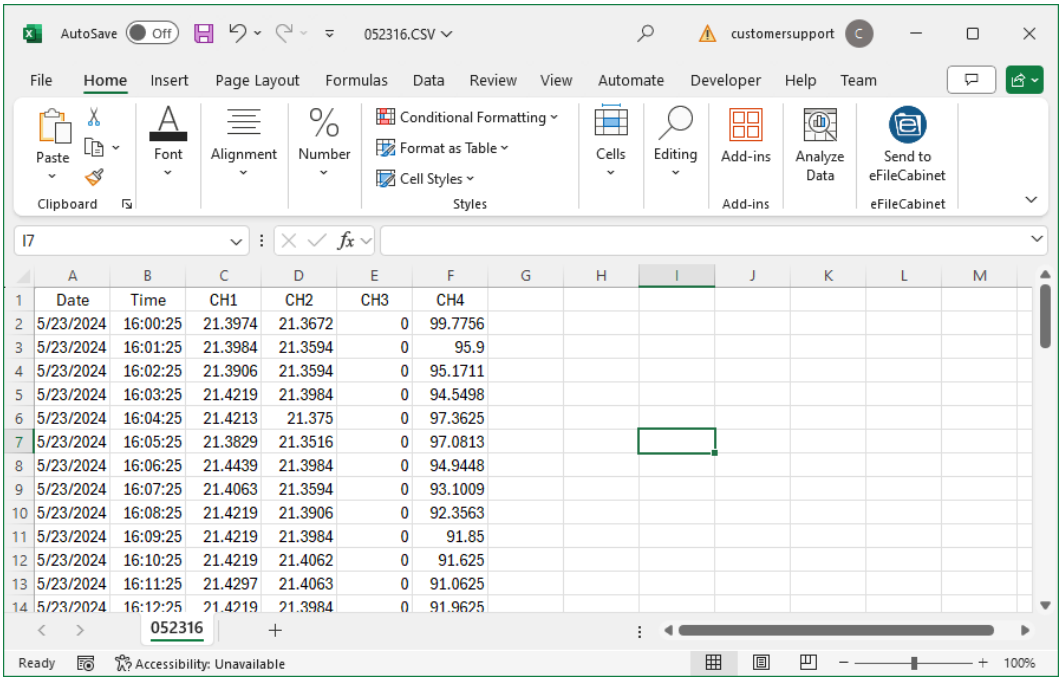

Figure 4-10: Data Logging File Contents

DIAGNOSTICS – ANALOG OUTPUTS MENU (4-20 OUT)

The ANALOG OUTPUTS menu is only accessible if the user has installed the Optional Analog Output Board. Under normal operation, each output channel will transmit the signal detected on its respective input channel. The ANALOG OUTPUTS menu allows the user to force a selected value of either 4mA or 12mA to multiple output channels.

Note that the selected value of 4mA or 12mA will only be forced to selected channels while this menu page is open. Once the user accesses a different screen, the Optional Analog Output Board will automatically resume outputting the live values detected on the respective input channels.

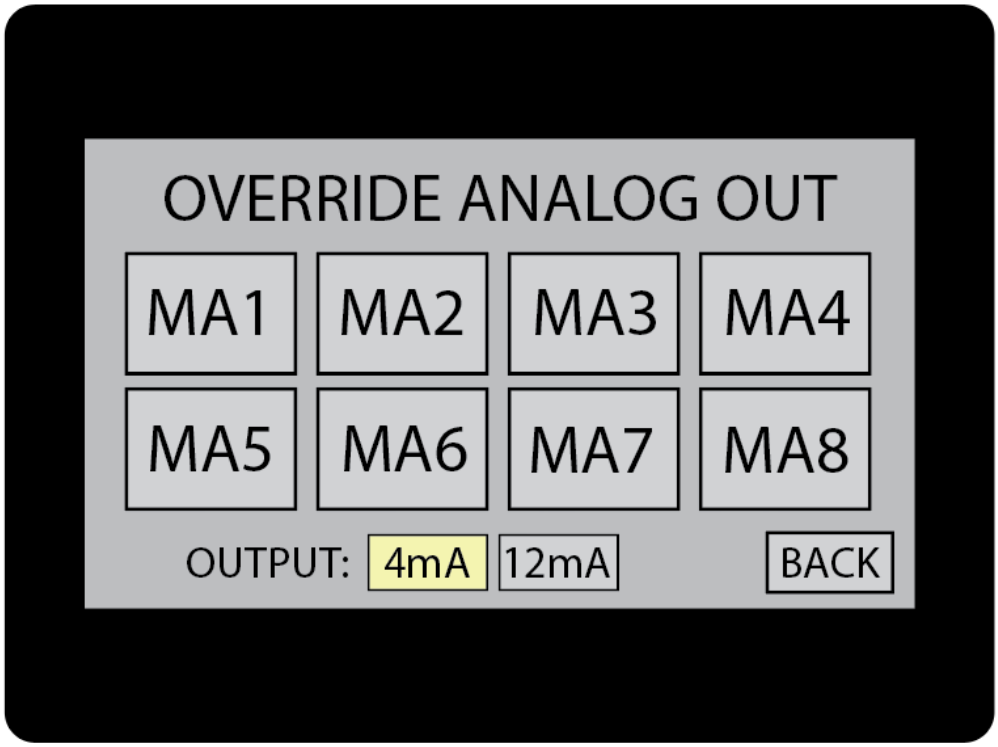

Figure 4-12: Analog Outputs Screen

DIAGNOSTICS - RELAYS MENU

Confirming proper operation of alarm systems connected to the *PROTECTOR PXA* is critical. To support that need, the *PROTECTOR PXA* has output override options that allow the user to manually trigger alarm relays and preset analog outputs to fixed values.

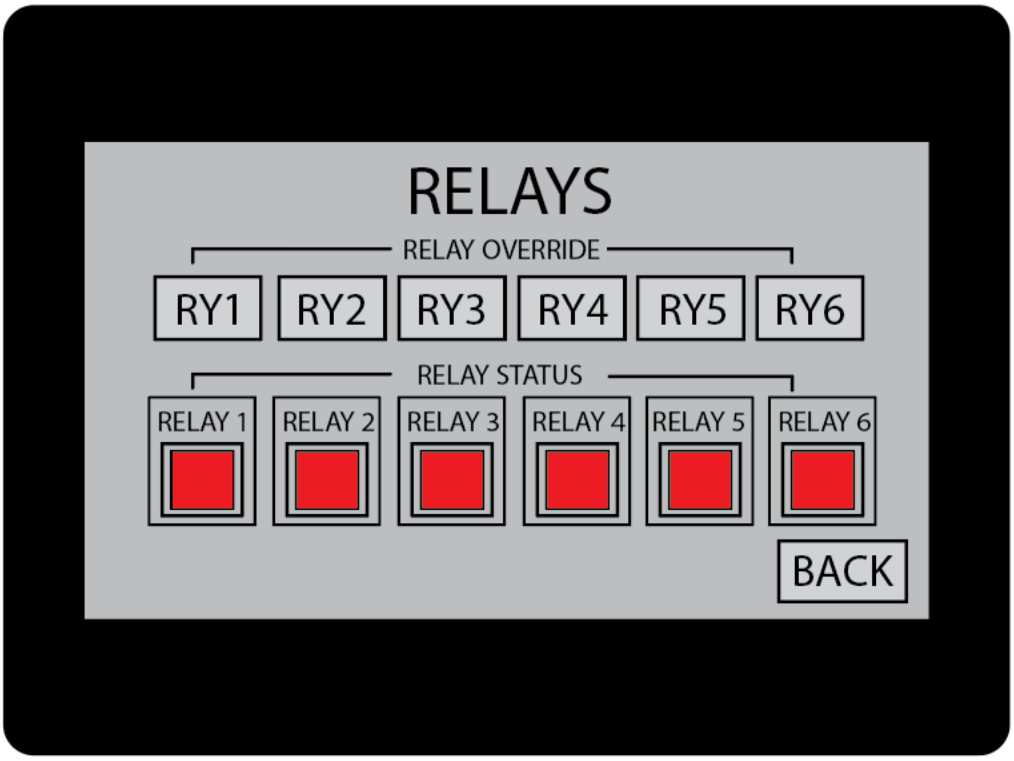

Figure 4-11: Relays Screen

Pressing any of the Relay Override buttons causes that relay to change state – if not active, it will become active, and if active (Failsafe), will become inactive. Pressing the button again will cancel the override.

NOTE: USE EXTREME CAUTION WHEN FORCING RELAYS OR ANALOG OUTPUTS TO OPERATE IN A MANNER INCONSISTENT WITH CURRENT ALARM CONDITIONS!

Pressing the "RESTORE DEFAULTS?" button will allow the user to reset the controller's input and output settings to factory default. This will erase all customized settings such as channel zero and span values, channel tag names and engineering units value, alarm setpoints and other user-configurable settings.

NOTE: THIS OPERATION CANNOT BE REVERSED. YOU WILL HAVE TO REPROGRAM THE ENTIRE CONTROLLER.

5 MODBUS REGISTER MAP

MODBUS OPERATION

If the MODBUS serial interface is enabled (See Fig. 4-6), the *PROTECTOR PXA* will respond to MODBUS data read requests with integer, floating point and binary status information on each of the 4/8 channels. The INTEGER reading returns a single 16 bit register for each channel, with a 'counts' value between 800 (zero) and 4000 (full scale). Readings between 0 and 800 represent mA values between 0mA and 4mA. The FLOATING-POINT reading spans two consecutive registers and returns a 32-bit IEEE floating point number that represents the engineering unit's value.
The CHANNEL STATUS WORD reading returns a single 16 bit register with defined bits (see below).

MODBUS SERIAL OUTPUT PORT CONFIGURATION

Parameter	**Setting**	**Notes**
Physical Layer	RS-485 two-wire multi-drop	
Data Format	MODBUS RTU	
MODBUS ID	Programmable, 1-240	Default = 1
Baud Rate	9600, 19.2K, 57.6K, 115.2K	Default = 9600
Data Bits	8	
Parity	None	
Stop Bits	1	
Timeout	1000 milliseconds	
Data Register Type	Holding Registers	

MODBUS REGISTER MAP

Reg	Data	R/W	Length	Type	Notes
33001-30025					
Single Register Integer Reading, 800 = zero, 4000 = full scale					
33001	Channel 1 Counts	R	16 bits	Integer	800 - 4000
33002	Channel 2 Counts	R	16 bits	Integer	800 - 4000
33003	Channel 3 Counts	R	16 bits	Integer	800 - 4000
33004	Channel 4 Counts	R	16 bits	Integer	800 - 4000
33005	Channel 5 Counts	R	16 bits	Integer	800 - 4000
33006	Channel 6 Counts	R	16 bits	Integer	800 - 4000
33007	Channel 7 Counts	R	16 bits	Integer	800 - 4000
33008	Channel 8 Counts	R	16 bits	Integer	800 - 4000
Double Register 32 Bit Float Reading					
33010	Channel 1 Real	R	16 bits	Float	Channel 1 Float Value
33011	Channel 1 Real	R	16 bits	Float	
33012	Channel 2 Real	R	16 bits	Float	Channel 2 Float Value
33013	Channel 2 Real	R	16 bits	Float	
33014	Channel 3 Real	R	16 bits	Float	Channel 3 Float Value
33015	Channel 3 Real	R	16 bits	Float	
33016	Channel 4 Real	R	16 bits	Float	Channel 4 Float Value
33017	Channel 4 Real	R	16 bits	Float	
33018	Channel 5 Real	R	16 bits	Float	Channel 5 Float Value
33019	Channel 5 Real	R	16 bits	Float	

33020	Channel 6 Real	R	16 bits	Float	Channel 6 Float Value
33021	Channel 6 Real	R	16 bits	Float	
33022	Channel 7 Real	R	16 bits	Float	Channel 7 Float Value
33023	Channel 7 Real	R	16 bits	Float	
33024	Channel 8 Real	R	16 bits	Float	Channel 8 Float Value
33025	Channel 8 Real	R	16 bits	Float	
30001-30014					
Single Register Integer Reading, 800 = zero, 4000 = full scale					
30001	Relay #1 Status	R	16 bits	Integer	0 = inactive, 1 = active
30002	Relay #2 Status	R	16 bits	Integer	0 = inactive, 1 = active
30003	Relay #3 Status	R	16 bits	Integer	0 = inactive, 1 = active
30004	Relay #4 Status	R	16 bits	Integer	0 = inactive, 1 = active
30005	Relay #5 Status	R	16 bits	Integer	0 = inactive, 1 = active
30006	Relay #6 Status	R	16 bits	Integer	0 = inactive, 1 = active
30007	Channel #1 Status	R	16 bits	Integer	See below
30008	Channel #2 Status	R	16 bits	Integer	See below
30009	Channel #3 Status	R	16 bits	Integer	See below
30010	Channel #4 Status	R	16 bits	Integer	See below
30011	Channel #5 Status	R	16 bits	Integer	See below
30012	Channel #6 Status	R	16 bits	Integer	See below
30013	Channel #7 Status	R	16 bits	Integer	See below
30014	Channel #8 Status	R	16 bits	Integer	See below

Channel Status Word:

Bit 0: 1 = Channel in Fault, 0 = No Fault

Bit 1: 1 = Channel Alarm 1 Active, 0 = No Alarm

Bit 2: 1 = Channel Alarm 2 Active, 0 = No Alarm

Bit 3: 1 = Channel Alarm 3 Active, 0 = No Alarm

Bit 10: 1 = Channel Enabled, 0 = Channel Disabled

6 TROUBLESHOOTING GUIDE

DEVICE INOPERATIVE (NO DISPLAY)

- No AC power – check for AC power
- AC Power supply failure – measure input and output voltage on power supply
- Relays not responding to inputs after power-on – Relays disabled during warmup.

NO INPUT ON CHANNEL "X"

- Check that the controller channel is turned ON.
- Check input wiring not connected to proper input terminals.
- Check remote 4-20mA sensor is current SOURCE and not current SINK.

INPUT SIGNAL SHOWING INCORRECT VALUES

- Check range of 4-20mA input; range on both devices must match.
- Check proper number of displayed decimal points.

ALARM SETTINGS

- Alarm 2 not clearing automatically – Make sure Alarm 2 is not set to "Latch".
- Alarm 3 not working – Make sure Alarm 3 is enabled.

ANALOG OUTPUT NOT FUNCTIONAL

- Check wiring connected to proper output terminals.
- Check that the controller channel is turned ON.
- Check that input mA signal is greater than zero.
- Exercise mA output using OVERRIDE ANALOG OUTPUTS menu.

RELAY OUTPUT NOT FUNCTIONAL

- Check relay assigned to proper set of channel (Default = NONE)
- Check relay assigned to proper alarm level.
- Check relay votes >= 1
- Exercise relay using OVERRIDE menu.

SERIAL MODBUS NOT COMMUNICATING

- Serial MODBUS not enabled (See MODBUS Serial Port menu)
- Baud rate set incorrectly; parity, number of stop and data bits set incorrectly.
- "A" and "B" serial data wiring swapped.
- Excessive 'common mode voltage' between devices due to a lack of a common ground

SERIAL MODBUS DATA INCORRECT

- Floating point data requires two registers and proper interpretation of data; Data should be interpreted using "Little Endian Byte-Swap" format.
- Register starting point or register address incorrect

7 SPECIFICATIONS

Power Input	100-240 VAC with included AC supply or +24V (+/- 20%) DC
Sensor Power	90 watts DC with included AC power supply Limited only by external source otherwise
User Interface	4.3" Diagonal 480 x 272 resistive touch screen; intuitive display and setup menu
Analog Inputs	4/8x industry-standard 4-20mA analog inputs.
Alarm Settings	Three programmable alarm levels per channel with Alarm Above and Alarm Below options. Alarm 2 programmable latching. Alarm programmable on/off.
Alarm Acknowledge	On-screen and two local / remote dry contact closure inputs. Optional front-panel ACK button.
Analog Outputs	2x local 4-20mA outputs; optional 4x 0-20mA outputs
Relay Outputs	Four 5A programmable dry contact relays: Maximum voltage 250VAC; Maximum non-inductive current 5A Two dedicated wet-contact +24VDC relay outputs for local horn and strobe
MODBUS Outputs	Serial RS-485 MODBUS slave port (9600 or 19.2K, 57.6K or 115.2KB)
Data Logging	Stores 1-minute samples for each of the four input channels. Maximum SD Card Size 32 GB
Enclosure	Polycarbonate wall-mount with hinged cover and stainless-steel snap latch. Non-corrosive, non-conductive rigid design. UL 508A, UL 50 and UL 50E Types 1, 2, 3, 3R, 4, 4X, 12 & 13 Follows EN/IEC 60204-1 and 60529 Type IP66
Operating Temp	-10C to +50C operating range -20C to +50C storage range 95% RH non-condensing
Dimensions	12.5" High x 10.72" Wide x 7.2" Deep (Does not include strobes or horns), Designed for wall mounting
Approvals	HMI: UL certified for Class I, Div. 2 Groups A, B, C, D; Class II, Division 2, Groups F & G; Class III Hazardous Locations. Indoor use only. AC Power Supply: SELV (EN60950, VDE0100/T.410), PELV (EN50178); USA (UL 60950, E137006, UL508 LISTED, E198865)
Warranty	One-year limited warranty

8 DIMENSIONS

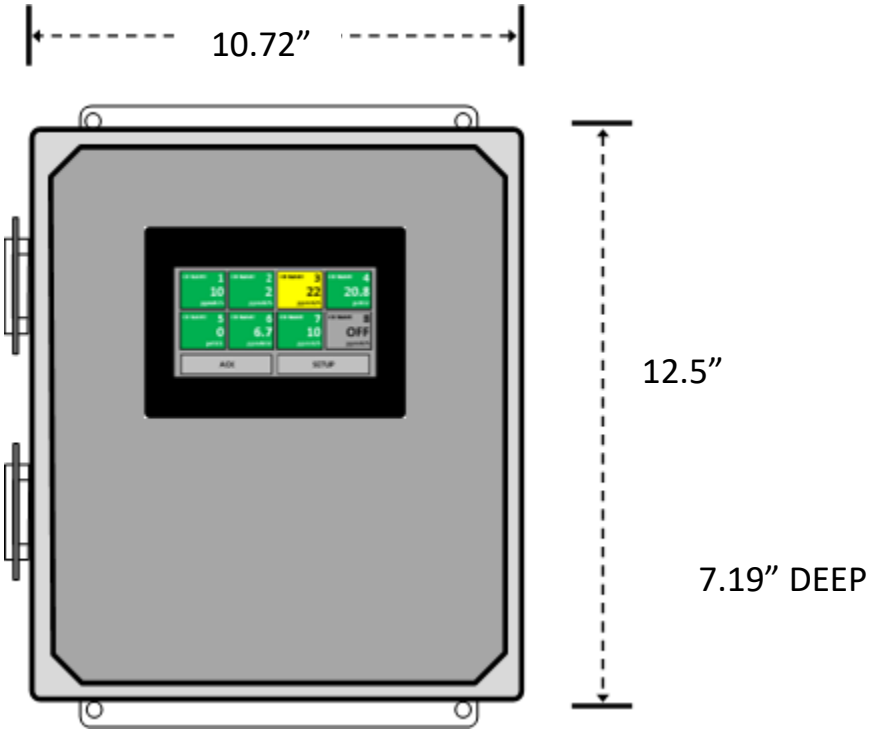

Figure 8-1: Outside Dimensions

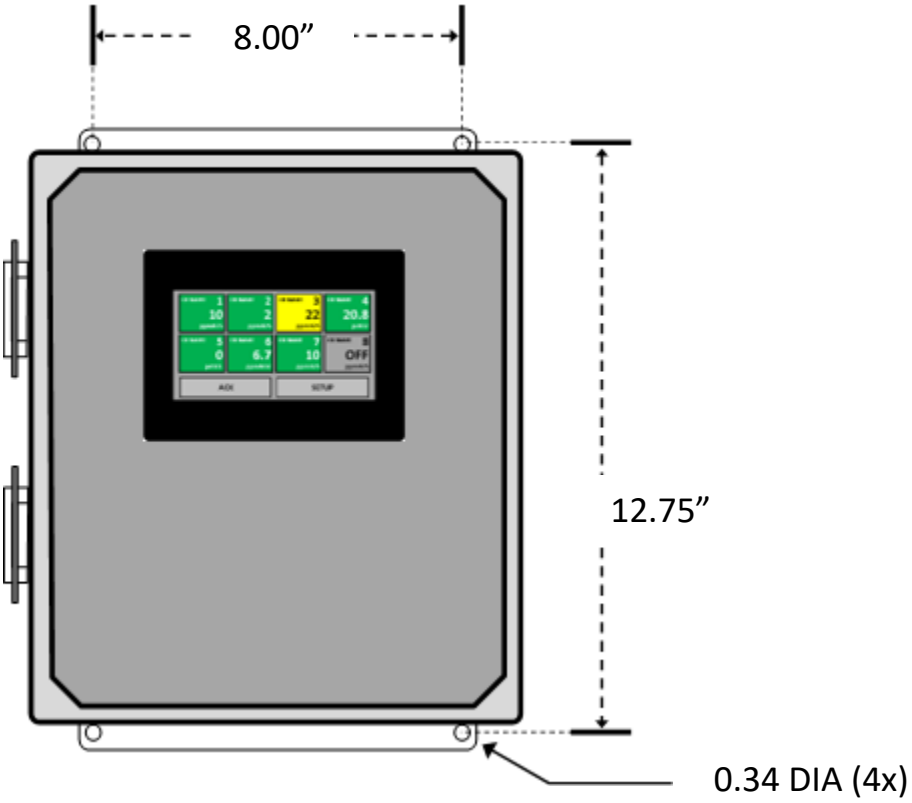

Figure 8-2: Mounting Hole Dimensions


GDS
Corp
Gas and Flame Detection