GDS Corp

Gas and Flame Detection

Operation and Maintenance Manual

GDS-450 Alarm Station for General Purpose Areas

GDS Corp.

1245 Butler Road • League City, TX 77573

409-927-2980 • www.gdscorp.com

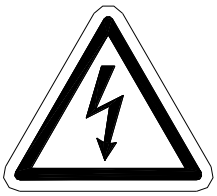

CAUTION: FOR SAFETY REASONS THIS EQUIPMENT MUST BE OPERATED AND SERVICED BY QUALIFIED PERSONNEL ONLY. READ AND UNDERSTAND INSTRUCTION MANUAL COMPLETELY BEFORE OPERATING OR SERVICING.

ATTENTION: POUR DES RAISONS DE SÉCURITÉ, CET ÉQUIPEMENT DOIT ÊTRE UTILISÉ, ENTRETENU ET RÉPARÉ UNIQUEMENT PAR UN PERSONNEL QUALIFIÉ. ÉTUDIER LE MANUE D'INSTRUCTIONS EN ENTIER AVANT D'UTILISER, D'ENTRETENIR OU DE RÉPARER L'ÉQUIPEMENT.

REVISION HISTORY

Revision 1.0	8/22/17	Initial Release
Revision 1.1	1/22/25	Minor revisions and updates

Copyright © 2025 GDS Corp. All Rights Reserved
P/N 1200-0980-011

CONTENTS

1 SAFETY INFORMATION _____ 6

2 GENERAL INFORMATION_____ 7

3 GDS-450 SPECIFICATIONS _____ 8

4 INSTALLATION _____ 9

5 TROUBLESHOOTING GUIDE_____ 11

6 DRAWINGS AND DIMENSIONS _____ 12

TABLE OF FIGURES

FIGURE 4-1: GDS-450 WIRING DIAGRAM 9

FIGURE 6-1: GDS-450 DIMENSIONS..... 12

1 SAFETY INFORMATION

Important – Read Before Installation

Read the following WARNINGS prior to use.

WARNINGS

- Shock Hazard - Disconnect or turn off power before installing or servicing this equipment.
- Do not operate horn within 15” of ear; wear hearing protection when testing
- If mounting the GDS-450 on a pole or other exposed location, protect the GDS-450 from lightning or electrical discharge
- This equipment is suitable for use in non-hazardous locations only
- Use properly rated wire; use of crimp ferrules for wire termination is highly recommended
- Adhere to all applicable local or national wiring installation guidelines or regulations
- Clean using only a damp cloth with no solvents.
- Do not pressure wash!
- Equipment not used as prescribed within this manual may impair overall safety.

2 GENERAL INFORMATION

The GDS Corp GDS-450 is a two-strobe plus horn alarm station designed to provide unambiguous warning indication of hazardous or dangerous conditions. The GDS-450 provides separate connections for each device to allow any combination of strobe or horn activation.

Key features include:

- High visibility Xenon strobes with 360° visibility
- Choice of strobe colors
- Suitable for indoor or outdoor installation
- Multiple-tone electronic horn sounder
- Stainless steel mounting panel
- Pole or wall mount
- Easy-wire junction box
- 110VAC or +24VDC input power
- Quick-connect option for temporary installations
- Side or bottom wire entry

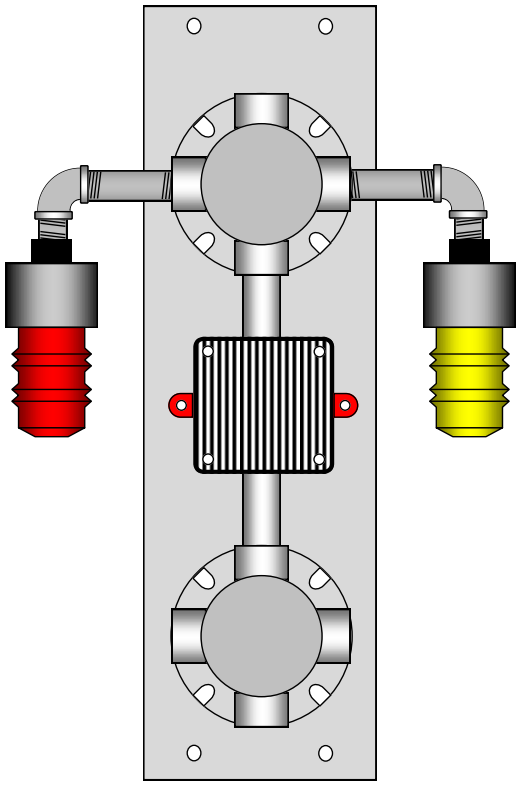

3 GDS-450 SPECIFICATIONS

Power Input*	110/220VAC, 20 watts (all devices activated) 24VDC (12V available) 25 watts (all devices activated) (Specify 110VAC, +24VDC or +12VDC when ordering)
Strobe(s)	Flash rate: 60 – 80 flashes per second 50 effective candlepower (ECP) 10,000 hour Xenon strobe lamp Lexan® lens assembly NEMA 4X rating Available in Amber, Blue, Clear, Green, Purple & Red
Horn Sounder	Adjustable for horn, bell, chime, siren, slow whoop, temporal, hi-lo, single bell 91-97 dB output UL listed for indoor / outdoor use
Construction	16GA #316 stainless steel mounting plate Stainless steel conduit Power-coated aluminum junction boxes
Environmental	-40°C to +65°C Suitable for outdoor installation
Altitude	Maximum 5000 ft / 1500 meters
Dimensions	See Drawings and Dimensions
Approvals	For use in general purpose areas only
Warranty	One year from date of purchase

4 INSTALLATION

SELECTING A LOCATION

The GDS-450 Alarm Station should be mounted in a location with suitable visibility. Entry gates, central control rooms, outdoor instrument shelters and free-standing poles are ideal locations. The GDS-450 mounting plate includes openings for 2" U-bolts as well as wall-mount bolts.

CONNECTIONS

Wiring connections to the GDS-450 are made to a PCB located in the lower wiring junction box. To access the terminals, remove the cover from the lower junction box. The wiring terminals provide separate power leads for each strobe and the horn and a common DC ground / AC neutral connection.

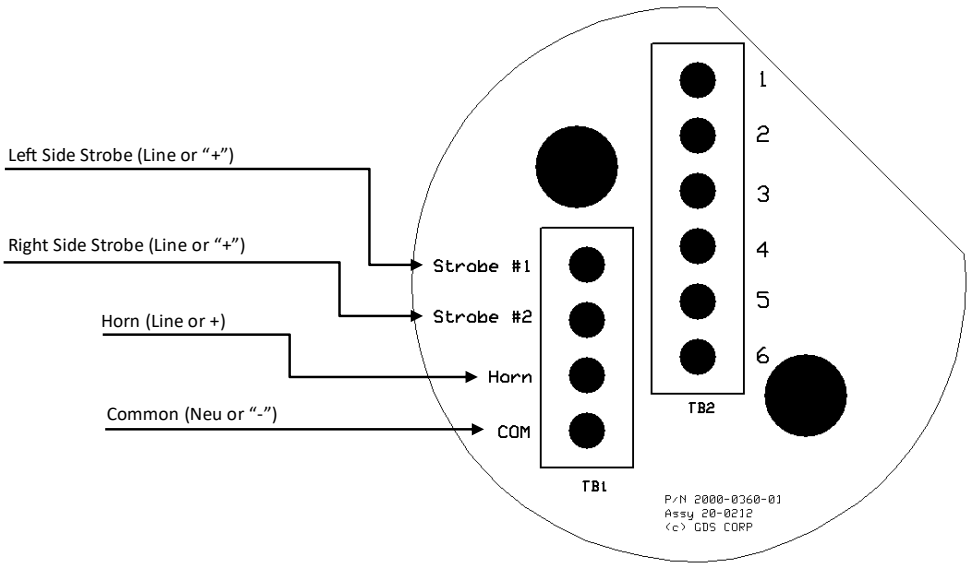

Figure 4-1: GDS-450 Wiring Diagram

CAUTION: ALWAYS MAKE SURE THAT THE WIRING JUNCTION BOX IS PROPERLY SEALED AGAINST WATER INGRESS. THE WIRING JUNCTION BOX PROVIDES BOTH SIDE AND BOTTOM ENTRIES (BOTTOM IS PREFERRED). BE SURE THAT PLUGS ARE INSTALLED IN ANY UNUSED WIRING ENTRIES AND THAT THE **COVER IS TIGHTENED SECURELY.**

HORN PROGRAMMING

The horn sounder can be programmed for eight different sounds via a dip-switch located at the upper right inside the horn enclosure. See the following table below for programming options. Note switch marking ("ON" = 1)

Tone	Pattern	SW1	SW2	SW3	SW4
Horn	Broadband Horn (Factory Setting)	1	1	1	1
Bell	1560 Hz Modulated	1	1	0	1
March Time Horn	Horn, 0.25 sec ON, 0.25 sec OFF (repeat)	1	0	0	1
Code-3 Horn	ANSI S3.41	1	1	1	0
Code-3 Tone	500 Hz ANSI S3.41	1	0	1	1
Slow Whoop	500 Hz – 1200 Hz sweep	1	0	1	0
Siren	600 Hz – 1200 Hz sweep	1	1	0	0
Hi-Lo	1000 / 800 Hz alternate	1	0	0	0

5 TROUBLESHOOTING GUIDE

STROBES INOPERATIVE

- No power
- Incorrect power source (AC or DC)
- Hot wire disconnected
- Common wire not connected or faulty

HORN INOPERATIVE

- No power
- Incorrect power source (AC or DC)
- Hot wire disconnected
- Common wire not connected of faulty

HORN PATTERN INCORRECT

- Reprogram horn using internal DIP switches

6 DRAWINGS AND DIMENSIONS

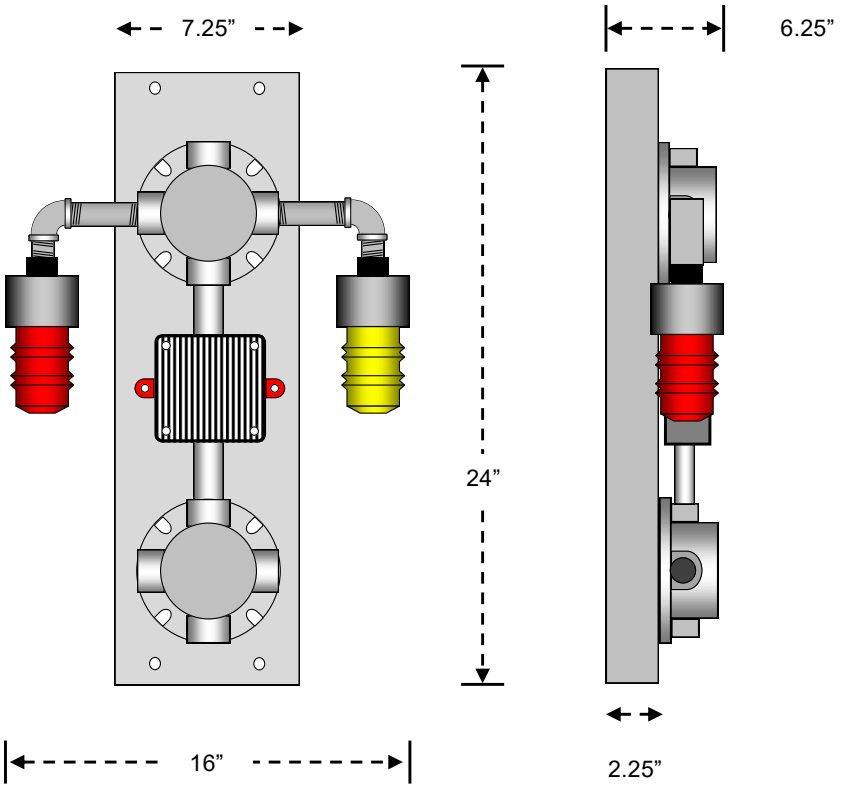

Figure 6-1: GDS-450 Dimensions


GDS
Corp
Gas and Flame Detection