Operation & Maintenance Manual

Electrochemical (EC) Gas Sensor Family

For Detection of Toxic Gases

Important: Read and understand contents prior to first use. Improper use or operation could result in instrument malfunction or serious injury.

© 2006 Global Detection Systems Corp.
All Rights Reserved

This page intentionally left blank

Table of Contents

SECTION 1 – SAFETY INFORMATION 5

1.1 Safety Information – Read Before Installation & Applying Power 5

1.2 Contacting Global Detection Systems Corp. 5

SECTION 2 – EC FAMILY SENSOR SPECIFICATIONS 6

SECTION 3 - GENERAL DESCRIPTION 7

3.1 GDS Electrochemical Gas Sensor Family 7

3.2 Features (Installed in GDS-48 Remote Sensor Housing) 7

3.3 Features (Installed in GDS-49 Sensor Transmitter) 7

3.3 Features (Installed with GASMAX Gas Monitor or C2 Two-Channel Controller) 7

3.4 Electrochemical Sensor Technology 8

SECTION 4 - OPERATION 9

4.1 Installation and Startup 9

4.2 Start-Up 10

4.3 Normal Operation 10

SECTION 5 - CALIBRATION 11

5.1 Calibration 11

SECTION 6 – SENSOR MAINTENANCE 12

6.1 GDS Electrochemical Sensor Maintenance 12

SECTION 7 – DRAWINGS AND PARTS LIST (SIMPLE SENSOR) 13

SECTION 8 – DRAWINGS AND PARTS LIST (SMART SENSOR) 14

APPENDIX A – EC SENSOR TYPES & CONCENTRATIONS 15

This page intentionally left blank

SECTION 1 – SAFETY INFORMATION

1.1 Safety Information – Read Before Installation & Applying Power

IMPORTANT

Users should have a detailed understanding of GDS Electrochemical Sensor Family operating and maintenance instructions. Use GDS EC Sensors only as specified in this manual or detection of gases and the resulting protection provided may be impaired. Read the following **WARNINGS** prior to use.

WARNINGS

- Do not paint the sensor assembly.
- Do not use the GDS EC sensor if its enclosure is damaged or cracked or has missing components.
- Make sure the cover and field wiring are securely in place before operation.
- Periodically test for correct operation of the system's alarm events by exposing the monitor / sensor system to a targeted gas concentration above the High Alarm setpoint.
- Do not expose the GDS EC sensor to electrical shock or continuous severe mechanical shock.
- Protect the GDS EC sensor from dripping liquids and high power sprays.
- Use only for applications described within this manual.

CAUTION: FOR SAFETY REASONS THIS EQUIPMENT MUST BE OPERATED AND SERVICED BY QUALIFIED PERSONNEL ONLY. READ AND UNDERSTAND INSTRUCTION MANUAL COMPLETELY BEFORE OPERATING OR SERVICING.

ATTENTION: POUR DES RAISONS DE SÉCURITÉ, CET ÉQUIPEMENT DOIT ÊTRE UTILISÉ, ENTRETENU ET RÉPARÉ UNIQUEMENT PAR UN PERSONNEL QUALIFIÉ. ÉTUDIER LE MANUE D'INSTRUCTIONS EN ENTIER AVANT D'UTILISER, D'ENTRETENIR OU DE RÉPARER L'ÉQUIPEMENT.

1.2 Contacting Global Detection Systems Corp.

To contact Global Detection Systems Corp, please call 409-927-2980, FAX 409-927-4180 or visit us on the web at www.gdscorp.com For sales information, send email to sales@gdscorp.com or for technical support email us at tech@gdscorp.com Our headquarters are located at 2513 Hwy 6 in Santa Fe, Texas 77510.

SECTION 2 – EC FAMILY SENSOR SPECIFICATIONS

Model:	Global Detection Systems Corp. Electrochemical Gas Sensor
Available gases:	See Appendix A
Detection Method:	Diffusion
Output (analog):	Installed in GDS-48 Universal Sensor Head: Low level microvolt signal; 25 ft max cable (included) Installed in GASMAX II Gas Monitor: 4-20 mA (Source type) max. 600 Ohm load at 24 VDC supply voltage
Response Time:	Depends on sensor
Operating Temperature Rating:	Remote installation using GDS-48 Universal Sensor: -20°C to +70°C Local installation with GASMAX II Gas Monitor (Arctic Monitor option): -40°C to +70°C
Operating Voltage:	Installed in GDS-48 Universal Remote Sensor Head: N/A Installed in GASMAX II Gas Monitor: See GASMAX manual
Power Consumption:	N/A
Hazardous Environment Certification	Installed in GDS-48 Universal Sensor Head: CSA Certified Class 1, Division 1, Groups B, C, D Installed in GASMAX II Gas Monitor: CSA Certified Class 1, Division 1 Groups B, C, D
Warranty:	Electronics – Two years from date of purchase Sensor – One year from date of purchase

SECTION 3 - GENERAL DESCRIPTION

3.1 GDS Electrochemical Gas Sensor Family

The GDS family of Electrochemical (EC) Sensors provides a low cost, efficient solution for the monitoring of toxic gases. Sensors are available in a wide range of gases and concentrations, with an emphasis on detection of levels recommended for personnel protection. GDS EC Sensors can be directly connected to a GDS Corp **C2 *Protector*** two-channel controller, a single or dual channel **GASMAX II** Gas Monitor, a **GDS-49 Sensor Transmitter** or other instrumentation device that supports a low level microvolt input. To connect GDS EC Sensors to a GDS **C1 *Protector*** sixteen-channel controller, the GDS-49 Sensor Transmitter is recommended.

3.2 Features (Installed in GDS-48 Remote Sensor Housing)

- Output compatible with C2, GASMAX and GDS-49 low-level microvolt input circuits
- Wide selection of gases and target ranges available
- Low cost

3.3 Features (Installed in GDS-49 Sensor Transmitter)

- All above features plus the following:
- 4-20mA two-wire current sink output
- Sensor fault / sensor removed indication

3.3 Features (Installed with GASMAX Monitor or C2 Controller)

- All above features plus the following:
- Smart Sensor records serial number, born-on date and other information (GASMAX only)
- Graphic alphanumeric display in engineering units with alarm LEDs
- Optional isolated 4-20mA output, MODBUS digital serial output
- Optional alarm relay contacts (3 separate levels + Fault)
- Magnetic interface allows setup without declassifying hazardous area
- Second GASMAX channel supports simultaneous monitoring of toxic gas using electrochemical sensor

3.4 Electrochemical Sensor Technology

Electrochemical sensors operate by reacting with the gas of interest and producing an electrical signal proportional to the gas concentration. A typical electrochemical sensor consists of a sensing electrode, a reference electrode and a counter electrode. Gas molecules in the ambient air diffuse through the sensor hydrophobic membrane and react with the electrolyte material. Depending on the type of sensor and target gas, the gas is either oxidized or reduced at the surface of the electrolyte, creating a micro-amp current flow between the sensor electrodes.

Some electrochemical sensors require a bias voltage to maintain a known chemical environment in the cell electrolyte. If the bias voltage is removed (during storage, for example) , it may take several hours or even days for the sensor to re-stabilize once the bias voltage is applied.

In some cases, a filter is installed in front of the hydrophobic membrane to filter out unwanted gases that may be present in some applications. The most commonly used filter is activated charcoal; this filters out most gases with the exception of carbon monoxide and hydrogen.

As a result of each sensor's unique design requirements, electrochemical sensors are generally selective to the intended target gas. In some cases, electrochemical sensors will react with compounds similar to the target gas (chlorine sensors will detect bromine, for example). This effect is called "cross sensitivity" and as a result the user should be aware of all gases that might be present in a specific application.

Due to the chemical reactions present in electrochemical sensors, a continuous supply of oxygen is required for most sensors to operate. An inadequate supply of oxygen will reduce overall sensitivity and eventually cause the sensor to fail.

The life expectancy of an electrochemical sensor is determined by the amount of gas seen by the sensor, relative humidity, temperature and the presence of certain reactive gases. As the sensor ages, the electrolyte is eventually used up and the sensor must be replaced. Prolonged exposure to extremely high humidity applications can cause the sensor electrolyte to become overly saturated with water, causing physical swelling and leakage. Extremely low humidity will cause the sensor electrolyte to dry out prematurely.

SECTION 4 - OPERATION

4.1 Installation and Startup

WARNING: *THE USER SHALL BE MADE AWARE THAT IF THE EQUIPMENT IS USED IN A MANNER NOT SPECIFIED BY THE MANUFACTURER, THE PROTECTION PROVIDED BY THE EQUIPMENT MAY BE IMPAIRED.*

The first step in the installation process is to establish a mounting location for the GDS EC sensor. Select a location that is typical of the atmosphere to be monitored or close to the anticipated source of a target gas.

It is very important that the GDS EC sensor be properly located to enable it to provide maximum protection. The most effective number and placement of sensors vary depending on the conditions of the application. When determining where to locate sensors the following factors should be considered.

- What are the characteristics of the gas that is to be detected? Is it lighter or heavier than air? If it is lighter than air the sensor should be placed above the potential gas leak. Place the sensor close to the floor for gases that are heavier than air or for vapors resulting from flammable liquid spills. Note that air currents can cause a gas that is heavier than air to rise. In addition, if the temperature of the gas is hotter than ambient air or mixed with gases that are lighter than air, it could also rise.

- How rapidly will the gas diffuse into the ambient air? Select a location for the sensor that is close to the anticipated source of a gas leak.

- Wind or ventilation characteristics of the immediate area must also be considered. Movement of air may cause gas to accumulate more heavily in one area than in another. The detector should be placed in the areas where the most concentrated accumulation of gas is anticipated. For outdoor applications with strong wind conditions, it may require the sensors to be mounted closer together and on the down wind side, to the anticipated area of a gas leak. Also take into consideration for indoor applications, the fact that many ventilation systems do not operate continuously.

- The sensor should be accessible for maintenance.

- Excessive heat or vibration can cause premature failure of any electronic device and should be avoided if possible.

- Follow all national and local installation codes and practices**.**

The GDS-48 Universal Sensor housing, GASMAX II Gas Monitor and GDS-49 Sensor Transmitter provide a ¾" NPT threaded connector for installation with conduit or shielded cable. **For C2 Controller or GASMAX monitor remotely-mounted sensors, special twisted wire is provided and must be used (max length 25').** Wiring should be installed in metal conduit with no other cabling in the same conduit.

4.2 Start-Up

After installation, allow the sensor to stabilize for a minimum of eight hours (overnight is best).

4.3 Normal Operation

The operation of any gas sensor should be checked periodically to ensure proper operation. When first installed, a GDS EC Sensor should be challenged with a calibration gas to make certain that the detector and any associated alarm systems are functional. Periodically thereafter, the sensor should be tested and/or recalibrated as necessary. Normally, initial calibration tests should be done at least monthly, and may be done on a more extended basis once some experience with the sensor and surrounding environment is obtained.

SECTION 5 - CALIBRATION

5.1 Calibration

GDS EC Sensors are available factory-programmed for specific gases and ranges. Each sensor should be calibrated for best accuracy as described in the appropriate controller manual using clean ambient air (or 'zero air' if toxic gases are present) for zero calibration and the appropriate reference gas for span calibration.

After installation, allow the sensor to stabilize for a period of 8 hours or more, preferably overnight, before performing the initial calibration. During the first several weeks of operation, periodically calibrate the sensor to ensure there are no localized sources of contamination or environmental effects that may block cause the unit to drift or become inaccurate. It is recommended that the eventual period between calibrations be no longer than 60 days.

SECTION 6 – SENSOR MAINTENANCE

6.1 GDS Electrochemical Sensor Maintenance

The GDS Electrochemical Sensor is a highly reliable, self-contained detector that requires very little maintenance other than periodic calibration and/or sensor element replacement. There are no user-serviceable parts inside the sensor element.

SECTION 7 – DRAWINGS AND PARTS LIST (Simple Sensor)

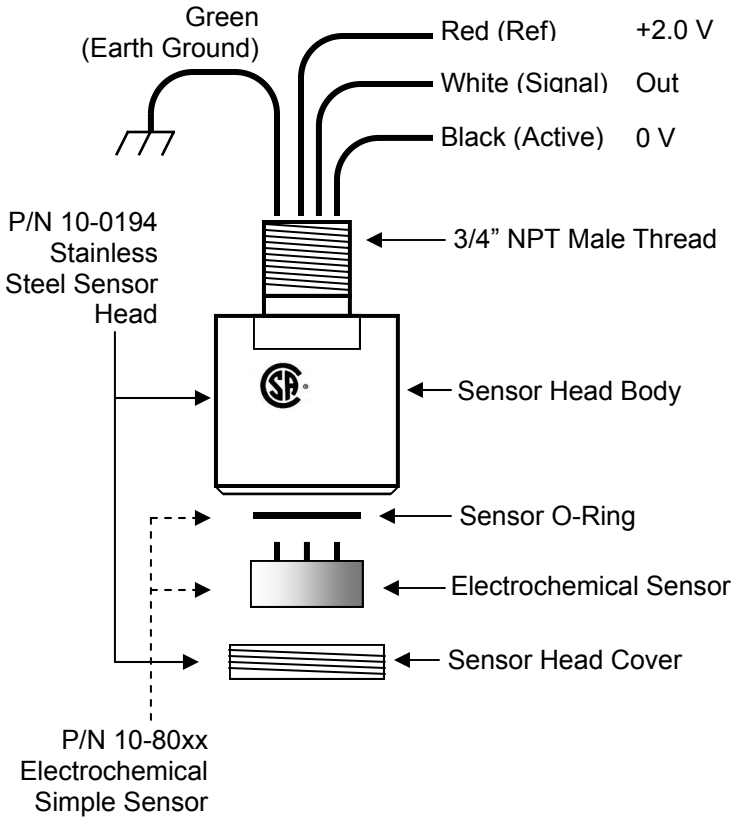

GDS Electrochemical
Simple Sensor Assembly

Part No.	Description
10-0194	Stainless Steel Sensor Head
10-80xx	GDS electrochemical simple sensor
10-0198	Sensor splash guard
10-0205	Sensor flow cell for process monitoring
10-0187	Sensor replacement tool kit
1000-0078	Large black magnet for GASMAX II

SECTION 8 – DRAWINGS AND PARTS LIST (Smart Sensor)

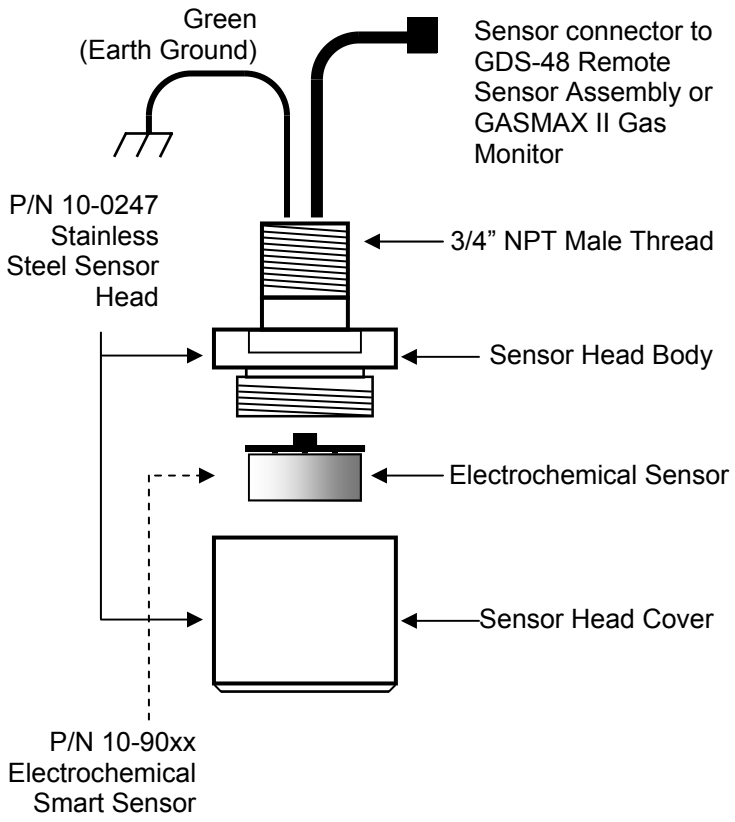

GDS Electrochemical Smart Sensor Assembly

Part No.	Description
10-0247	Stainless Steel Sensor Head
10-90xx	GDS electrochemical smart sensor
10-0198	Sensor splash guard
10-0205	Sensor flow cell for process monitoring
10-0187	Sensor replacement tool kit
1000-0078	Large black magnet for GASMAX II

APPENDIX A – EC SENSOR TYPES & CONCENTRATIONS

Gas / Vapor	Formula	Range	GDS Sensor Type	Notes
Ammonia	NH_3	0-100 ppm	20	
Arsine	AsH_3	0-1 ppm	23	
Bromine	Br		12	
Carbon Disulfide	CS_2		22	
Carbon Monoxide	CO	0-1 ppm	11	
Chlorine	CL_2	0-5 ppm	12	
Chlorine	CL_2	0-50 ppm	12	
Chlorine Dioxide	CLO_2	0-1 ppm	13	
Diborane	B_2H_6		23	
Ethylene Oxide	C_2H_4O	0-20 ppm	22	
Fluorine	F_2	0-1 ppm	25	
Hydrazine	N_2H_4	0-1 ppm	27	
Hydrogen	H_2	0-2000 ppm	14	
Hydrogen Chloride	HCL	0-30 ppm	17	
Hydrogen Cyanide	HCN	0-50 ppm	16	
Hydrogen Fluoride	HF	0-10 ppm	18	
Hydrogen Sulfide	H_2S	0-50 ppm	15	
Hydrogen Sulfide	H_2S	0-100 ppm	15	
Nitric Oxide	NO	0-100 ppm	28	
Nitric Oxide	NO	0-500 ppm	28	
Nitrogen Dioxide	NO_2	0-5 ppm	29	
Nitrogen Dioxide	NO_2	0-50 ppm	29	
Mercaptan	CH_4S	0-50 ppm	30	
Oxygen	O_2	0-25%	10	
Ozone	O_3	0-1 ppm	21	
Phosphorus Trichloride	PCL_3		17	
Phosgene	$COCL_2$	0-1 ppm	26	
Silane	SiH_4	0-50 ppm	24	
Sulfur Dioxide	SO_2	0-20 ppm	19	
Sulfur Dioxide	SO_2	0-100 ppm	19	
Tetrahydrothiophene THT	C_4H_8S	0-100 ppm	31	